THE ANALYST

THE ORGAN OF THE

Society of Public Analysts and other Analytical Chemists

A MONTHLY JOURNAL DEVOTED TO THE ADVANCEMENT OF ANALYTICAL CHEMISTRY

Publication Committee:

E. RICHARDS BOLTON, F.I.C. (President).

F. W. F. ARNAUD, F.I.C.
A. CHASTON CHAPMAN, F.I.C., F.R.S.
CECIL H. CRIBB, B.Sc., F.I.C.
J. C. DRUMMOND, D.Sc., F.I.C.
J. T. DUNN, D.Sc., F.I.C.
BERNARD DYER, D.Sc., F.I.C.
E. HINKS, M.B.E., B.Sc., F.I.C.
E. B. HUGHES, M.Sc., F.I.C.
P. A. ELLIS RICHARDS, F.I.C.
W. H. SIMMONS, B.Sc., F.I.C.
E. W. VOELCKER, A.R.S.M., F.I.C.
J. AUGUSTUS VOELCKER, M.A., Ph.D., F.I.C.

Editor: C. AINSWORTH MITCHELL, M.A., F.I.C.

Abstractors:

J. GRANT, M.Sc., A.I.C.
T. H. POPE, B.Sc., F.I.C.
D. G. HEWER, B.Sc.
P. H. PRICE, B.Sc.
R. F. INNES, F.I.C.
W. R. SCHOELLER, Ph.D.
W. P. SKERTCHLY, F.I.C.

VOL. LI.

1926

DEPARTMENT OF SCIENCE

PUBLISHED FOR THE SOCIETY BY
W. HEFFER & SONS LTD.
PETTY CURY, CAMBRIDGE, ENGLAND
1926

JANUARY, 1926. Vol. LI., No. 598.

THE ANALYST

PROCEEDINGS OF THE SOCIETY OF PUBLIC ANALYSTS AND OTHER ANALYTICAL CHEMISTS.

AN Ordinary Meeting of the Society was held at the Chemical Society's Rooms, Burlington House, on Wednesday, 2nd December, 1925. Mr. S. F. Burford, F.I.C., Vice-President, was in the chair.

Certificates were read for the first time in favour of Messrs. Guy Chignell, K. Saito and Hugh Gower Watts.

Certificates were read for the second time in favour of Messrs. John Douglas Barrett, B.Sc., A.I.C.; Arthur Frank Lerrigo, B.Sc. F.I.C., Oscar Adolf Mendelsohn, B.Sc., Harold Edward Monk, B.Sc., A.I.C., and Eric Voelcker, A.R.C.Sc., A.I.C.

The following were elected Members of the Society:—Messrs. Alexander Bruce, B.Sc., F.I.C., Sydney George Clarke, B.Sc., A.I.C., Felix John Theodore Grigg, M.Sc., A.I.C., John Hanley, F.I.C., Arthur John Jones, A.I.C., Henry William Lawrence, F.I.C., Fred Mattingley, B.Sc., A.I.C., Clive Newcomb, I.M.S., M.D., F.I.C., Bartle Frere Sawbridge, M.A., F.I.C., Harold Jacob Stern, B.Sc., Ph.D., A.I.C.

The following papers were read and discussed:—"Measuring the Smoke Pollution of City Air," by J. S. Owens, M.D., A.M.I.C.E.; 2:4-Dinitrophenylhydrazine as a Reagent for the Detection of Aldehydes and Ketones," by Oscar L. Brady, D.Sc., F.I.C., and Gladys V. Elsmie; "The Determination of Phosphoric Acid as Magnesium Ammonium Phosphate," by Gunner Jörgensen; and "On the Effect of 'Blowing' on the Composition of Certain Fatty Oils," by C. H. Thomson.

NORTH OF ENGLAND SECTION.

A MEETING of the Section was held at Leeds on November 21st, 1925. The following notes were read:—(1) "The Use of Jena Sintered-Glass Crucibles; (2) "The Reichert-Polenske-Kirschner Values of the Fat of Canned Milk and Cream," by G. D. Elsdon, B.Sc., F.I.C.

Dr. J. T. Dunn initiated a discussion on the misdescription of foodstuffs.

Measuring the Smoke Pollution of City Air.

By J. S. OWENS, M.D., A.M.I.C.E.

(Advisory Committee on Atmospheric Pollution.)

(*Read at the Meeting, December* 2, 1925.)

The question is often asked: What is the use of measuring the amount of smoke in the air? As this aspect of the problem appears to have much weight with the public, it may be as well to specify clearly what we expect to gain by measurement.

Broadly speaking, in any investigation, unless we can reduce the data to a quantitative value, we do not get very far. It is also true that in few researches can the whole bearing or importance of the work be seen at the start, and, indeed, there would be very little original research work carried out if we waited to know the full bearing before doing anything. This necessarily follows from the fact that it is chiefly during the process of such research work that the practical bearings suggest themselves.

To return to the measurement of smoke pollution: It is necessary to bring out the extent of the evil and its incidence at different places, but, until the work of measurement had been placed on a reasonably sound basis, we had no means of comparing cities with each other, nor could we say if things were getting worse or improving. When efforts are made to purify the air it is advisable that we should be in a position to ascertain what degree of success attends these efforts. The demand for clean air in our cities will never be sufficiently imperative unless the public realise that there is a need for purifying the air similar to, and just as important as, that for providing pure water and food for human consumption.

In the present paper the author does not propose to deal with the problem of measuring smoke from individual chimneys: this is a problem in itself and one which urgently requires solution. Attention will be confined to methods of estimating the degree of smoke pollution of the air itself due to the combined effect of all the chimneys and other sources of pollution in a city.

The methods hitherto adopted have been very numerous, but we may divide them into two groups:—(1) Those aiming at measuring the deposit of impurity from the air; (2) Those which deal with the impurity while suspended in the air.

Deposited Matter.—Attempts to measure deposit were made in 1902 in Manchester by Mr. W. Irwin (*J. Soc. Chem. Ind.*, 1902, **21**, 533), by estimating the amount of deposited matter contained in snow. He inferred that in ten days about 3·05 tons of soot fell per square mile or 30 tons per day on 100 square miles, with Manchester as centre.

In 1906 Mr. F. W. Harris collected the deposit in Glasgow by exposing boxes during the winter. He calculated in this way that there was a soot fall of 896 tons per square mile per annum in Glasgow.

Cohen (*Smoke: A Study of Town Air*, Arnold, 1912) measured the deposit in Leeds in 1907–08 in funnels 12 inches diameter, obtaining 539 tons per square mile in the industrial district.

Preliminary experiments were made by Des Voeux and the author ("Sootfall of London," *Lancet*, January 6th, 1912) in 1910–11, in searching for a suitable method of measurement. The sootfall obtained in that year for different parts of London was 500 to 650 tons per square mile.

SUSPENDED MATTER.—These attempts to measure the deposit from the air could not, if successful, tell the whole story, as the very finely divided particles, of the order of 1 micron diameter, settle so slowly through the air that the measurement of deposit could only deal with part of the impurity; there would remain the suspended matter kept up by turbulent air motion. Many efforts have been made in the past to devise methods of measuring this. These lend themselves to consideration under different headings:—

IMPACT.—In most methods attempting to utilise impact a stream of dusty air is forcibly directed against a surface specially prepared with some sticky material, such as glycerin, oil and so on. All such depend primarily upon the greater density of the particles causing them to be centrifuged out when the air is made to change its direction rapidly. An example of such is the Kotze konimeter, in which a jet of air is caused to strike a glass slide smeared with vaseline (*Final Report of Miner's Phthisis Prevention Committee*, Union of South Africa, 1919), and the dust spot so obtained is examined microscopically.

As impact methods depend upon the superior density of the suspended particles and the centrifugal force developed when these are caused to bend round a small radius, the efficiency of such methods must be a function of the velocity of the jet. When a particle of weight W moves in a path of radius R with a linear velocity V, the centrifugal force developed is equal to:— $\frac{WV^2}{gR}$.

The force projecting the particles against the glass therefore varies with the square of their velocity, but if the jet velocity is sufficiently high to make the method efficient, any adhesive used is blown away from the point of impact, or pitted. This is the fundamental objection to the use of adhesives in such methods, and is the reason why in the author's instrument, described later, the use of such adhesives has been abandoned. Again, when particles of dust are embedded in a liquid or semi-liquid some of them may dissolve, while others become invisible if their refractive indices are the same as the liquid. A final objection is the difficulty of accurately counting such records, since a low-power microscope must be used. In actual use the efficiency of the method is low.

FILTRATION.—Many attempts have been made to filter the suspended matter from the air and often with success. The use of soluble filters, such as sugar, permits the subsequent solution of the filter in water, and a dust count may be made from a sample of this. Of course, all particles soluble in the medium are thus neglected. Filtration through paper or cotton wool, or indeed any medium

of suitable structure might be used, and many forms of such filters have been tried, such as extraction thimbles (Brady and Touzlain, *J. Ind. Eng. Chem.*, 1911). Collodion wool and cloths of various kinds have also been used. There is, however, a difficulty in connection with filtration methods:—If the material trapped is to be weighed, as is usually attempted, then the time required to get a weighable quantity is usually a matter of some hours. When it is realised that the winter air in London and other large cities rarely contains more than a milligramme of dust per cubic metre, excluding days of dense smoke haze when there is an abnormal pollution, it will be seen that a very large volume of air must be filtered to get a weighable quantity. If we wish to know the impurity present at a particular time it is not much use using a method which requires to be run for some hours to give a measurable result. Hence gravimetric methods are hardly applicable, except for getting averages over long periods. This consideration drives one to seek for some other method of estimation, and the method adopted in the author's recorder, to be described later, is to compare the discoloration on a filter paper with a calibrated scale of shades.

AGITATION WITH WATER.—Attempts have been made to wash out the suspended matter from air by passing the air through fine sprays or bubbling it through liquid. In Palmer's apparatus (*Amer. J. Pub. Health*, 1916) air is drawn at high velocity through 40 c.c. of water in a special vessel so as to produce great disturbance and spraying; the loss from evaporation is made good and a 1 c.c. sample of the liquid counted in a cell after settlement. This apparatus has not proved very efficient, and takes account of insoluble dust only. In this connection it is well to remember that the dust particles in air are not always easily wetted; in fact, one might expect that tarry soot particles would not. In attempts to trap such by bubbling through water and other liquids it has been found that most of the suspended matter passes through the liquid unaffected. This is not very surprising when we picture a particle of under one micron diameter floating inside a bubble one or two thousand times that diameter; it may by a lucky chance come in contact with the walls, but if so it is unlikely that it should adhere.

CONDENSATION.—The well-known Aitken dust counter (*Collected Scientific Papers of J. Aitken*, Cambridge, 1923) aims at causing condensation of atmospheric moisture upon the dust particles, and the number of drops thus formed which settle from a known volume are subsequently counted. Aitken himself realised that condensation did not occur on all the dust particles, but only upon those having an affinity for water. Hence his definition of dust limited the word to particles which serve as nuclei of condensation. Unfortunately the use in this specialised sense of a word which had a colloquial meaning has given rise to misunderstanding. The Aitken dust counter is known now to deal only with the hygroscopic nuclei, taking no account of the insoluble non-hygroscopic dust.

ELECTRICAL PRECIPITATION.—The method of electrical precipitation has been used successfully for measuring suspended dust. Its application is described by

Sir Oliver Lodge (*Electrical Precipitation*, Physics in Industry Series, Vol. 3), Cottrell (*Proc. Amer. Inst. Elec. Eng.*, 1915), and recently by Drinker and Thomson (*J. Indus. Hyg.*, Vol. 7, No. 6, 1925). The last describe a convenient method of using electrical precipitation for obtaining dust counts from the air. It is, however, obvious that all such methods require a source of electricity and usually a high voltage. Drinker and Thomson, using a voltage of from 10,000 to 20,000, precipitated the dust upon thin celluloid foil rolled up and pushed inside a glass tube, upon the outside of which was metal foil and in its axis a precipitating electrode inside a small glass tube. The celluloid could be withdrawn and pieces cut and mounted for microscopic examination. Professor Drinker has recently informed the author that he is successfully using this method combined with the author's dust counter in examining dust in alveolar air.

ULTRA MICROSCOPE.—Attempts to count the suspended dust by means of the ultra microscope have been made with varying degrees of success. Two main difficulties affect this method:—First the Brownian agitation of small particles makes the use of high magnification impossible, as the velocity of movement is magnified at the same time as the particle. Again, the visibility of the particle depends upon the intensity of illumination. Attempts made by the author to count dust particles in this way gave lower counts than given by the jet dust counter to be described presently. In one, for example, the dust counter gave 21,760 particles per cubic centimetre, the ultra microscope 18,750. Another great objection to the method is that one is forced to use a very small volume of air which may not be representative.

SETTLEMENT.—Attempts to measure dust by settlement can hardly be said to give more than very rough comparative values unless special precautions are used and, indeed, a special instrument, such as the settlement dust counter (*Tenth Annual Report of Advisory Committee on Atmospheric Pollution; cf.* ANALYST, 1925, **50**, 452). The rate of settlement depends upon the temperature, the degree of disturbance of the air, the size, the shape and the density of the particles, so that unless a fixed volume is enclosed and all the dust allowed to settle, these methods give little useful information.

Turning now to the methods adopted by the Advisory Committee; these are of three types:—(1) The deposit gauge; (2) The automatic filter, or recorder; (3) The dust counter.

The results obtained by these methods are embodied in the Annual Reports of the Committee (*cf.* ANALYST, 1922, **47**, 256; 1924, **49**, 34, 340; 1925, **50**, 452), and a general review of the whole subject will be found in *The Smoke Problem of Great Cities*, by Sir Napier Shaw, F.R.S., and the author, to be published shortly.

MEASUREMENT OF DEPOSIT.—The standard deposit gauge consists of an open-topped funnel connected below with bottles. The rain and deposited matter falling into this are collected in the bottles underneath and removed monthly for analysis. There are fifty-eight such gauges now in operation in different parts of the country. While there are two different types of gauge the fundamental

STONEWARE DEPOSIT GAUGE.

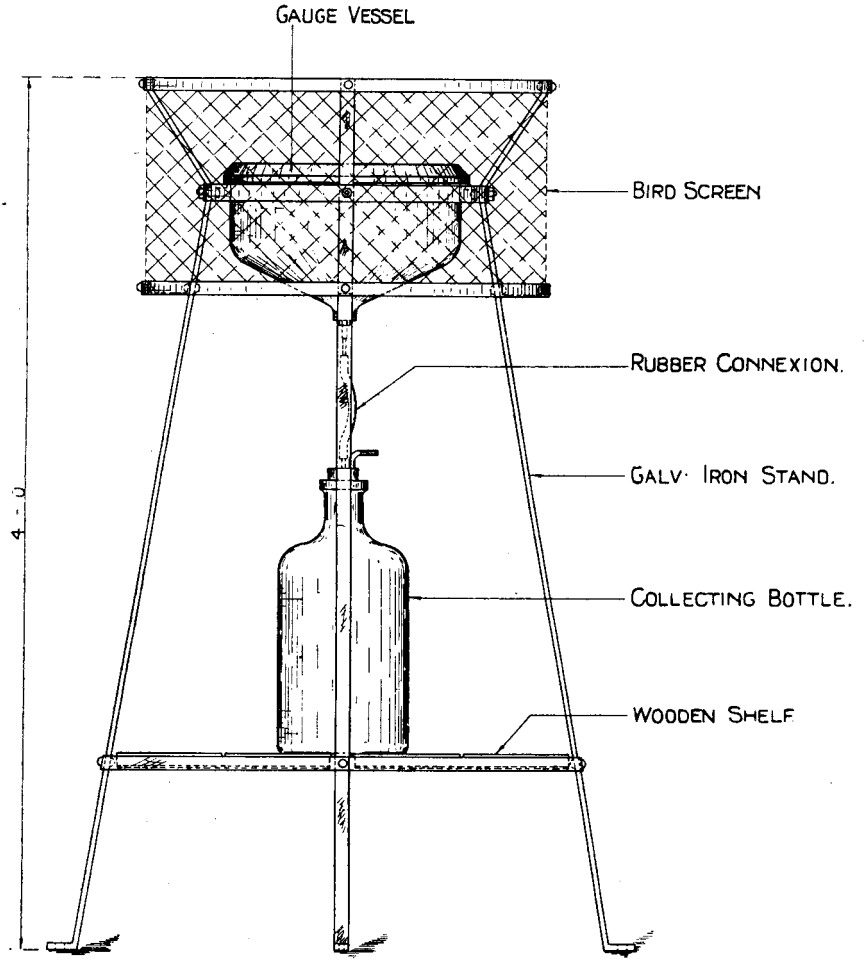

THE STANDARD STONEWARE GAUGE CONSISTS OF A GALVANISED IRON STAND SUPPORTING A CIRCULAR ENAMELLED STONEWARE VESSEL PROJECTING ABOVE THE GAUGE VESSEL IS A WIRE SCREEN OPEN AT THE TOP, INTENDED TO PREVENT BIRDS FROM SETTLING ON THE EDGE OF THE VESSEL THE VESSEL IS CONICAL AT THE BOTTOM AND COMMUNICATES, BY MEANS OF A GLASS TUBE AND RUBBER CONNEXION, WITH ONE OR MORE BOTTLES, DESIGNED TO HOLD ONE MONTH'S RAINFALL THE RAIN AND DEPOSITED MATTER FALLING ON THE G ARE COLLECTED IN THE BOTTLES AND REMOVED ONCE A MONTH FOR ANALYSIS

Fig. 1.

principle is the same in each. The larger gauge consists of a circular enamelled cast iron funnel about 70 cm. in diameter, whilst the other has a glazed stoneware funnel of 30 cm. diameter (Fig. 1). The large size of these is necessary to provide sufficient deposit for analysis. The inside of the gauges is washed down monthly with some of the collected water before the latter is removed for analysis. The deposited matter is divided into soluble and insoluble, and a partial analysis made of each, showing the tarry, carbonaceous or sooty and the insoluble mineral matter; the soluble part is divided into combustible or volatile matter and mineral matter. A further analysis of the soluble part is made into sulphates, chlorides and ammonia. It was felt that such a division gave the main constituents of the deposit which would be of interest, whilst a more complete analysis would have involved too much work, and therefore limited the scope of the enquiry. The authorities co-operating with the Committee make their own analyses and return to the Committee a monthly form, as shown herewith, in which the deposit is shown as grammes, per cent. of total solids and metric tons per square kilometre. The form has lately been modified to include also English tons per square mile. The nature of the deposit collected is shown in the accompanying table, which is taken from *The Smoke Problem of Great Cities*, above referred to, and this serves to show the great variation in different places. Another point of great interest is the curious relation which the deposit of sulphates bears to that of total solids. In all cases it will be seen that as the total deposit goes up the percentage of sulphates falls.

From the figures for deposit collected over several years it appears that the mean monthly deposit in London has fallen from 40·86 tons per square mile in 1916 to 24·14 in 1924. In Glasgow, the deposit has fallen in the same period from 46·28 tons per square mile to 30·77. These figures show the marked improvement in the air of these two cities of recent years, and illustrate one of the uses of measurement.

The method of measuring deposit in this way has been criticised as giving results depending upon rainfall rather than upon quantity of impurity. The figures collected by the Committee indicate that the deposit of insoluble matter bears no relation to the rainfall, whilst a relation is observable between the deposit of soluble matter and the amount of rainfall. This is of interest as indicating the part played by the soluble impurities as nuclei of condensation.

In setting up these gauges great care has to be taken in the selection of suitable sites, and efforts are made to observe certain rules:—The gauge is set up in an open position, well removed from any special source of impurity. It must not be sheltered in any way, and should be a distance from any obstacles in its neighbourhood, such as walls or buildings, equal to twice the height of the obstacle. The gauge is set up, when possible, upon the ground level, but the stand supporting the funnel raises the edge of the latter about 4 feet above the ground.

Automatic Filter or Recorder.—The conditions which an instrument for measuring suspended impurity should fulfil may be summarised as follows:—

The record should be either continuous or taken at short intervals of not more than fifteen minutes. This is essential, since it has been found that the variation

FORM 4761. No. of Report.....

METEOROLOGICAL OFFICE, AIR MINISTRY, LONDON.

ADVISORY COMMITTEE ON ATMOSPHERIC POLLUTION.

REPORT OF OBSERVATIONS FOR MONTH ENDING .....192.....

Centre ..... { Gauge No. ..... / Factor "F" for gauge.....

Collector.....

Volume of Water Collected.....litres = ...Millimetres of rainfall

Total Solids dissolved.....grammes } dried @ 100° C.
Total Insoluble matter.....

Total Solids Collected.....grammes = ...tons per sq. Kilometre.

	Grammes.	% of Total Solids.	Metric tons per square Kilometre.
COMPOSITION OF UNDISSOLVED MATTER:—			
Soluble in CS_2 (tarry matter).....	.....	= .....%	.....
Combustible matter insoluble in CS_2.....	.....	= .....%	.....
Ash	.....	= .....%	.....
Total undissolved matter.....			
COMPOSITION OF DISSOLVED MATTER:—			
Loss on ignition.....	.....	= .....%	.....
Ash	.....	= .....%	.....
Total dissolved matter.....			
Sulphate as SO_3	.....	= .....%	.....
Chlorine as Cl.	.....	= .....%	.....
Ammonia as NH_3.....	.....	= .....%	.....

REMARKS:—

Signed..... Date.....

in the density of the suspended matter is very rapid. A dense smoke haze in London has been known to clear practically completely in fifteen minutes. The instrument should be automatic, otherwise there will be too few observations to be of much value. It should be simple and reasonably reliable, otherwise skilled operators will be required. It is also preferable that the record given should be permanent. The automatic filter devised for the Advisory Committee appears

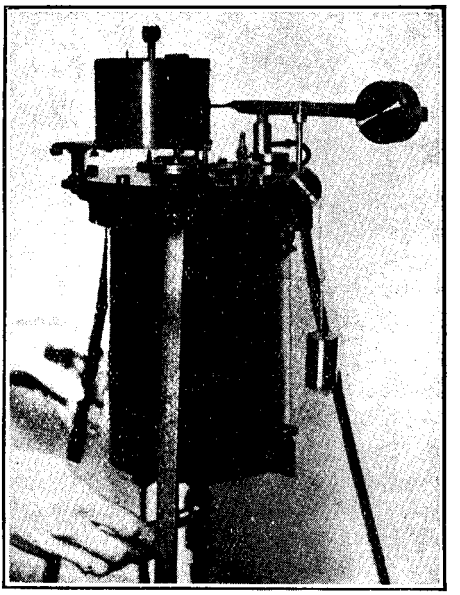

Fig. 2.

to fulfil these conditions fairly well. It is illustrated in Fig. 2. In operation it depends upon the automatic filtration of two litres of air through a disc of white filter paper at short intervals. The disc through which the air is drawn is 1/8th in. in diameter, and a discoloration, depending in depth upon the quantity of smoke present, is made upon the surface of the paper. The instrument has been already described in detail in the *Fourth Annual Report of the Advisory Committee on Atmospheric Pollution,* so that a very short description will be sufficient here:—The air to be filtered is measured and aspirated by the filling and emptying of a cylindrical vessel of water. The operation is automatic and controlled by a siphon; at each downward stroke two litres of air are drawn in to the vessel, and a perforated plug is pressed upon a disc of filter paper so as to isolate a 1/8th in. diameter spot through which all the air is forced to pass, on its way to the vessel. The pressure of this filter plug is given through the medium of a flexible diaphragm acted on by the air pressure outside the vessel. To bring this diaphragm into operation a system of balance weights, controlled by the water through the medium of a surface tension valve, is used. The filtering disc is mounted on a turn-table, the rotation of which is controlled by a clock, the hour hand of which the turn-table

COMPOSITION OF DEPOSIT AT FIVE REPRESENTATIVE STATIONS, GIVEN AS (*a*) ENGLISH TONS PER SQUARE MILE AND (*b*) PERCENTAGE OF TOTAL DEPOSIT. BOTH (*a*) AND (*b*) BASED ON MEAN MONTHLY DEPOSIT IN A YEAR.

Station.	Tarry matter.		Carbonaceous or sooty matter.		Mineral matter insoluble in water.		Combustible or volatile matter soluble in water.		Mineral matter soluble in water.		Total Solids.		Sulphates as SO_3		Chlorine as Cl.		Ammonia as NH_3	
	Tons per sq. mile.	Per Cent.	Tons per sq. mile.	Per Cent.	Tons per sq. mile.	Per Cent.	Tons per sq. mile.	Per Cent.	Tons per sq. mile.	Per Cent.	Tons per sq. mile.	Per Cent.	Tons per sq. mile.	Per Cent.	Tons per sq. mile.	Per Cent.	Tons per sq. mile.	Per Cent.
Oldham, 1915–16	0·56	0·71	16·39	20·08	41·85	53·20	6·16	7·80	13·81	17·50	78·77	100	6·53	8·30	2·27	2·86	0·46	0·58
Sheffield, Attercliffe, 1914–15	0·72	1·31	9·61	17·60	23·71	43·50	4·58	8·40	15·93	29·30	54·55	100	7·25	13·30	4·02	7·33	0·20	0·38
London, 1915–16, average of 8 stations	0·29	0·76	5·89	15·60	13·65	36·20	5·07	13·40	12·89	34·10	37·79	100	5·48	14·50	1·74	4·70	0·26	0·70
Manchester, 1915–16, average of 5 stations	0·13	0·41	4·30	13·57	12·13	38·27	3·38	10·66	11·76	37·09	31·69	100	4·79	15·11	1·31	4·13	0·13	0·41
Malvern, 1915–16	0	0	0·38	8·25	0·67	14·30	1·25	26·90	2·33	50·00	4·65	100	1·07	23·00	0·50	10·70	0·04	0·82

follows round, being itself actuated by a weight and string. Thus the filtering disc is free to stop when the filter plug is pressed upon it, and to overtake the clock when the pressure is released. Record discs are obtained, such as shown in Fig. 3, and the value of each shade is read by inserting the disc under a scale, so

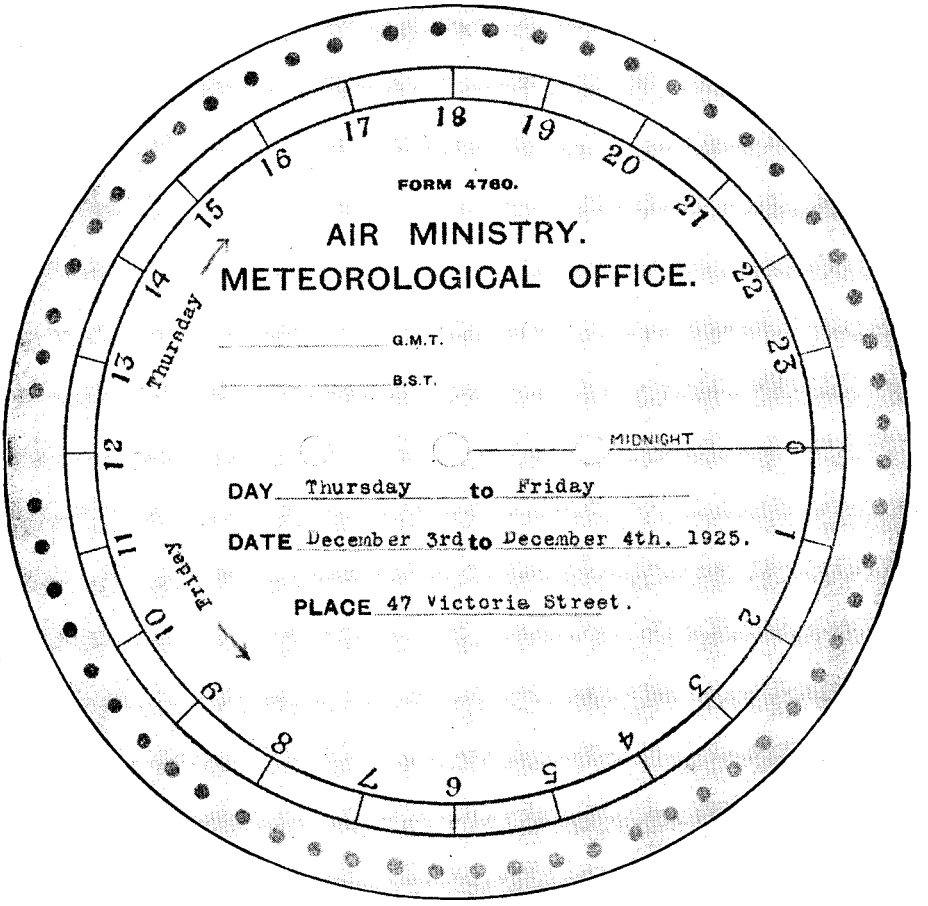

Fig. 3.

that the discoloured spot is seen through a 1/8th in. hole in the centre of each shade, thus permitting a good match to be obtained. The scale itself is calibrated by weighing, the process having been carried out for London air by a somewhat elaborate experiment in which a filter disc, 2½ ins. in diameter, was used, so as to get a sufficient deposit for weighing. Briefly, the value of the unit shade thus obtained was 0·32 milligrammes per cubic metre, and each succeeding shade is a multiple of the unit; Shade 2 indicates twice the impurity of Shade 1, and so on. The records can thus be interpreted either in terms of shade or weight of impurity,

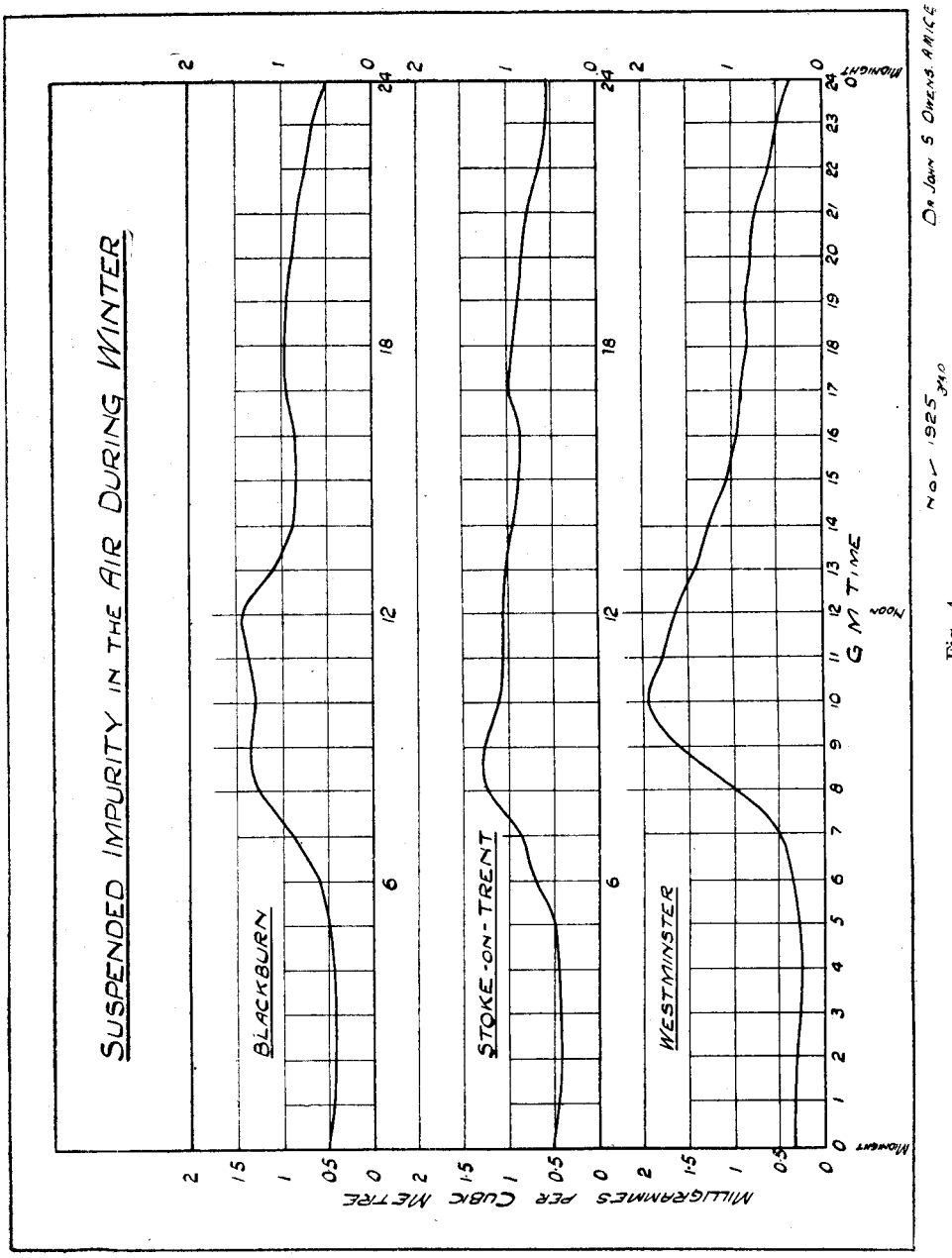
SUSPENDED IMPURITY IN THE AIR DURING WINTER
BLACKBURN
STOKE-ON-TRENT
WESTMINSTER
MILLIGRAMMES PER CUBIC METRE
G M TIME
MIDNIGHT
NOON
DR JOHN S OWENS. A.M.I.C.E.
NOV 1925

Fig. 4.

and curves of variation over any desired period may be prepared. Such curves are shown in Fig. 4 for Blackburn, London and Stoke-on-Trent, and it will be seen that there is evidence of great variation in the conditions at different places. The relation of the growth and fading of the impurity to human activities is very evident; even the delay of the maximum on Sundays, owing to later rising, is brought out in many of the curves. The history of a London smoke haze, or smoke fog as it is often called, is written on the records of this instrument, and it is curious to observe how often a day of thick smoke haze is preceded by the failure of the air to clear, as it normally does, between midnight and 5 or 6 a.m.

DUST COUNTER.—The third method of investigation used is the jet dust counter devised by the author. It will be evident that the automatic filter depends for its indication upon the colour of the impurity and gives no information as to its nature; hence something else was required, and the jet dust counter was evolved. In this instrument, described in the *Proceedings of the Royal Society* (Vol. A, 101, 1922; ANALYST, 1922, **47**, 322; 1924, **49**, 35), an impact method is used; great precautions are taken to get the highest possible efficiency. For example, the jet of air which is caused to impinge is made excessively thin and flat like a ribbon. In the standard instrument it is 1 centimetre wide and 0·1 millimetre thick. It is caused to strike a microscope cover glass at such a high velocity that the adiabatic expansion and cooling of the air brings about condensation of water upon the dust, or at least upon many of the dust particles, and the line of impact of the jet upon the cover glass is wetted in this way, causing the dust to adhere. When the jet impinges it is deflected laterally in two very thin films of air which are so shallow, owing to the thinness of the jet, that the high velocity enables the dust particles to penetrate to the bed of the air stream and to strike the cover glass. The instrument is illustrated in Fig. 5.

It will be seen that it consists of a head containing the slot for forming the jet, an air pump to draw the air through the jet, and a damping chamber through which the air must enter, and where it may pick up sufficient water to act as an adhesive. When taking a record the screwed plug *C* is removed, and the damping chamber filled with the air to be tested, by making a few strokes of the pump; a thoroughly clean cover glass is placed in the cell *R*, the plug *C* screwed home, and the handle of the pump withdrawn as rapidly as possible. It is useless to draw the air through slowly, as the velocity will not be sufficient to give high efficiency. The pump piston is therefore withdrawn as instantaneously as possible so that the air will enter at its maximum velocity, which is about that of sound, and impinge upon the cover glass, where it deposits its dust. The apparatus has been tested for efficiency in several ways:—An instrument was prepared having two cells, one above the other, and two slots in series, but staggered, so that the air drawn through the first slot impinged upon the roof of its cell and passed on to the next slot, impinging upon the roof of the second cell. The floors and roofs of these cells were made of glass, so that the process could be watched under the microscope, and an indication of the efficiency was given by the number of particles trapped

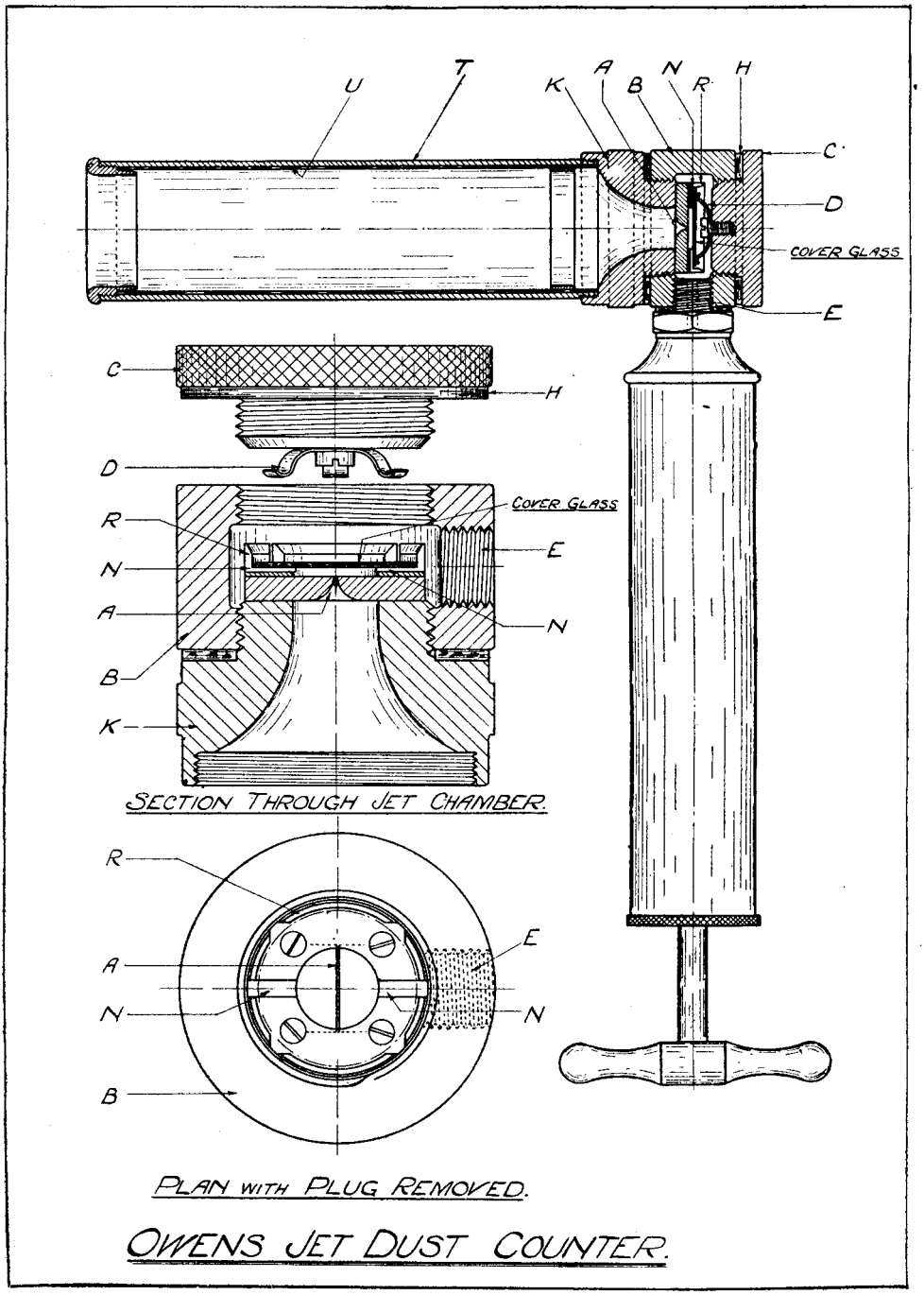
U
T
K
A
B
N
R
H
C
D
COVER GLASS
E
C
H
D
R
N
A
B
K
COVER GLASS
E
N
SECTION THROUGH JET CHAMBER.
R
A
N
B
E
N
PLAN WITH PLUG REMOVED.
OWENS JET DUST COUNTER.

Fig. 5.

upon the roof of the second cell. Obviously, if all were caught in the first cell none would appear in the second. Tested in this way, with the damping chamber in position, practically all the particles were found to be trapped in the first cell. Without the damping chamber, in dry weather, the efficiency is not nearly so high. Again, air which had passed through the jet was subsequently drawn through a paper filter known to trap all the dust, but such air did not produce a discoloration.

The record obtained in this instrument is a linear trace of dust 1 centimetre long across the cover glass. It is mounted, record downwards, over a metal or paper ring upon a microscope slide, and is then ready for examination. The linear form of the record permits it to be easily found by using a low power, such as a 2/3rd in. objective, and dark ground illumination. The record having been found, the high power is moved into position, and the dust particles can then be examined under a 1/12th in. oil immersion objective. It will be understood that, although the particles are not embedded in a medium, they are in contact with the under surface of the cover glass, and that therefore there is no air gap to spoil the resolution of the oil immersion objective. The particles can be counted by means of a net-ruled micrometer, examined and measured if desired. In this way it is found that the air of London on an ordinary winter's day contains from 5000 to 10,000 particles per cubic centimetre, but that during a dense smoke haze the number rises to 60,000 or 80,000. The dust particles are mostly small, averaging about 0·7 to 0·8 microns, and rarely exceeding 2 microns, and always scattered amongst the irregular black particles are a certain number of spherical transparent balls of a diameter up to 1½ microns or 2 microns, sometimes colourless and sometimes yellow or ruby. These are doubtless particles of fused ash from fires. During dense smoke haze the average size of the particles is greater.

A second method of using the instrument may be of interest:—It will be understood that the adhesion of the particles depends upon the condensation of water, and this water, if there is not enough in the air, is supplied from the damping chamber. A volume of 50 c.c. is found to provide a record nicely scattered and suitable for counting in London air. If a larger volume, say 1000 c.c., be drawn through, the particles are piled one on top of the other, and if, at the same time, the damping chamber be held in the hand so as to warm it slightly, enough water is condensed on the record to be blown out sideways in definite streams. In the heads of these streams, which dry up immediately, are found crystals of the soluble salts present in the dust. The examination of these crystals provides a means of identifying the salt present.

Another method of examination is to take a very dense record on the cover glass and support a second cover glass about 1 millimetre above it, the record being enclosed between the two. A drop of water placed on the top cover glass keeps it cool, while the lower one, with its record, is heated. Treated in this way, it is found that often over the line of dust on the lower glass a line of oil drops is deposited on the upper one. Such drops from London records are soluble in xylol but not in water, and, no doubt, are derived from tar in the soot.

Still another method of utilising the instrument is to take records upon prepared cover glasses on which a dilute solution of methyl orange has been allowed to evaporate, covering the glass with small crystals. The dust impinging upon the prepared surface, and being wetted at the same time, acts upon the methyl orange, forming crystals characteristic of the acid or alkaline salt. For example, during a dense London fog on January 22nd, 1922, the dust examined in this way was definitely acid, whereas a few days previously a definitely alkaline reaction was obtained. A modification of this method has been tried in which two half-discs of filter paper have been fixed upon a thin ring so as to fit in the instrument instead of a cover glass. One half disc was coloured with methyl orange or congo red made slightly acid, and the other with the same indicator slightly alkaline, but both as nearly neutral as possible consistent with distinct coloration. The record was then taken across the junction of the half discs, and the colour change on the paper observed.

In the examination of the soluble salts found in these records there is considerable difficulty, since the crystals obtained are very small. The author has sometimes obtained records consisting of practically nothing but crystalline matter; one group of such records was obtained during a warm, sunny day with a bluish haze on the sea coast in the south of Portugal. All the particles of the haze were obviously common salt, or at least sea salt. Another remarkable record of a similar type was obtained in the Gulf of St. Lawrence. Here there was a white haze and brilliant sunshine, and the record also consisted entirely of soluble crystalline matter. These crystals are too small to give characteristic effects under polarised light, as they can hardly be regarded as transparent. Methods of microchemical examination of such have been attempted, but not with very great success. For example, a reagent was sprayed into the air, and when the spray had practically all disappeared a cover glass was held under it and a few minute drops were found to have settled on this. This cover glass was then mounted in a special instrument, drops downwards, and over, but separated from, a second cover glass with the crystals to be examined. On breathing towards the crystals, being hygroscopic, they collected water and dissolved. Keeping them under observation under the microscope the drops of reagent and solution were brought into contact. The test was on such an excessively small scale that, although sometimes characteristic reactions were obtained, this was not always so.

A method is now being experimented on by the author, and promises more accurate results, but this has not been sufficiently advanced to be described.

Some idea of the scale of the operations and the sort of difficulties encountered may be formed when it is realised that the total weight of a 50 c.c. of dust record from London air on an average winter day would be about 1/20,000th of a milligramme. Such a record would have scattered over it about 600,000 dust particles. The weight of the individual particle or crystal it is desired to examine may thus be such that 12,000 million of these go to make one milligramme.

Discussion.

Mr. Wm. Partridge, having remarked upon the benefit to the country of such a paper, referred to the filtration methods of obtaining the dirt on soluble filters, such as sugar, and said that he had always found insoluble particles in both cane and beet varieties when a qnantity of thirty grammes was dissolved in water. He remembered that W. Chattaway and F. M. Wharton had, about 1901, demonstrated before the Society the use of liquefied gelatin for removing bacteria from air, and he wondered if it could be applied to dirt. As January was generally the coldest month of the year it was difficult to understand why one obtained the maximum deposit in November.

Mr. R. C. Frederick said that theoretically both the dust counter and the recorder would be liable to give results appreciably erroneous, but that Dr. Owens had rather disarmed criticism by showing the chart in which duplicate determinations by these two methods were in close agreement. With regard to the deposit gauge, however much care was exercised in selecting the site, it was impossible to obtain, on such a small superficial area, the average conditions prevailing over a square mile or more, and therefore the calculation of results to the second place of decimals was not justified. As one engaged both in the teaching and practice of hygiene he would be the last to belittle the importance of a pure atmosphere, but he felt that the expression of the results in tons per square mile, while useful for propaganda purposes, gave, from the scientific point of view, an altogether exaggerated impression of the condition of affairs. He concluded by drawing attention to the large amount of work on this subject which had been carried out recently in America.

Mr. H. E. Burgess described a form of disc he had invented to determine the amount of dirt in public buildings. He had collected dirt before and after theatrical performances in London, and had estimated it on the Lovibond tintometer. He had also burnt a known quantity of benzine in a room which was ventilated by a fan; unfortunately he had not been able to bring this method to any satisfactory mathematical conclusion, but, at the same time, he thought that the measurement of dirt by such a method might be possible.

Dr. Geoffrey Martin referred to coal-grinding apparatus the fine particles of coal dust from which penetrate right through clothing. From experiments on grinding he had found that the number increased as the diameter decreased according to the compound interest law. He added that on the seashore there was a constant grinding action among the pebbles which caused them to increase in number as the diameter decreased in the same way, and he enquired if there was any similar relationship between the fineness and the number of particles floating in the atmosphere.

Mr. E. Hinks referred to the fluid obtained from the gauge and said he had found some difficulties in carrying out the methods laid down for its examination. The deposit itself was difficult to dry to constant weight, and he had found asbestos more satisfactory than pulped filter paper; the weight of "tarry matter" obtained by evaporating the carbon bisulphide extract was generally considerably higher than that obtained by difference—the method prescribed; in titrating the chloride difficulty was experienced in obtaining a good end-point unless a greater amount of chromate indicator than was usually required were added.

Dr. B. S. Evans remarked that he had noticed that where the maximum was given in the curves it was always preceded by a sharp minimum.

Mr. C. C. ROBERTS remarked that among the figures given for London there were none for any place east of London Bridge, which, in his opinion, was misleading; or was London getting a better character for cleanliness than hitherto?

The CHAIRMAN (Mr. S. F. Burford) remarked that meteorology was a science of variables. Notwithstanding differences in volume of rainfall and differences in deposits, a mean of a long period would give reliable information for a given locality. He wondered there was nothing said about the use of permanganate as a reagent; what about the sulphur in the air acting as a bactericide? A good deal of sulphur must be present in the air; Did such a place as Rochdale have a higher death rate than other places, with less air pollution?

Dr. OWENS, replying, said that he could not agree with the suggestion that by passing air through liquid gelatin all the dust would be trapped; his experience of trapping dust by bubbling through liquid did not suggest that the method would be much use. With regard to the reference to a maximum deposit in November: the maximum was not always in November, but varied from year to year. It was doubtless influenced by the nature of the weather and wind experienced in any particular month. Regarding Mr. Frederick's and Mr. Burford's remarks, he was afraid it was impossible to get great accuracy in measuring atmospheric impurity, but some method giving the closest practical approximation to accuracy had to be used. He did not think it wrong to return results in tons per square mile, a form which was acceptable to non-technical people. The same objection applied to expressing rainfall in tons per acre or per square mile, but it was a useful and correct way to express it sometimes.

He agreed with the speaker who referred to the work being done in America; the Americans were very go-ahead, and were now using the instrument he had described. In replying to the criticism as to the use of a second place of decimals, it was difficult to get rid of the second place sometimes, but what they now aimed at was really to provide two significant figures. As to the suggestion that the residue from evaporation of carbon bisulphide should be taken as a measure of tar rather than the loss due to washing, he thought that this would probably be more correct, as the loss of the tar doubtless made the part left more hygroscopic and would therefore account for a difference in the result obtained by the two methods. Dr. Evans suggested that a maximum was always preceded by a minimum in the deposit figures, but he did not attach much importance to this. The curves for deposit for the different months were all parts of the same deposit and tended more or less to vary together. Individual years did not show the tendency to a low minimum preceding a maximum. As to the deposit gauges in London not extending far east, he thought they were in reasonably representative positions. It was not every place that could be utilised for a deposit gauge; in fact, it was always difficult to find suitable and representative positions. One had to remember that wind direction governed the source from which the impurity was derived, so that a gauge in a particular locality did not necessarily get the impurity produced in the immediate neighbourhood, although this applied more to the fine suspended matter recorded by the automatic filter than to the matter which was deposited in the gauges.

The Determination of Alcohol and Ethyl Chloride in Chloroform.

By CLIVE NEWCOMB, M.D., F.I.C., Major I.M.S.

(*Read at the Meeting, November* 4, 1925.)

ANAESTHETIC chloroform is commonly said to be a mixture of chloroform and alcohol, with, in some cases, ethyl chloride added. It also contains some water. It was thought of interest to try to devise methods of determining these substances in chloroform and of removing them, so that the physical constants of the resulting chloroform could be used for determining its purity. So long as it is known that only these four substances are present this is not difficult. The addition of anhydrous potassium carbonate will remove the water. Washing the chloroform with water in the way described below will remove all the alcohol, and none (or only a very small trace which can be allowed for) of the ethyl chloride. The difference in density before and after washing will give a measure of the amount of alcohol, and the difference in density of the washed chloroform from the density of pure chloroform will give a measure of the amount of ethyl chloride. Furthermore, boiling the mixture of chloroform and ethyl chloride with potassium hydroxide solution and then washing it, will remove the ethyl chloride and leave pure chloroform saturated with water. This water can then be removed, if necessary, by dehydrating agents. If, however, it is not known or assumed that only these four substances—chloroform, alcohol, ethyl chloride and water—are, or may be, present, the problem is more difficult. There are many other substances which might be present, and in small quantities escape detection by the B.P. tests, especially if the analyst's sense of smell were not particularly keen. A few of these possible impurities have been considered in this paper. It is plainly an endless task to try to deal with every possible impurity. The values obtained by the method outlined above are, however, in any case, maximum values for the amounts of alcohol and ethyl chloride present, and if a liquid with the right density for pure chloroform is obtained after their removal, the presence of many of the other possible impurities is unlikely.

In the experiments described below, 27° C. has been adopted as the standard temperature, because this is about the average temperature of this laboratory in the cold weather. When working at other average laboratory temperatures the corrections for the rate of change of density of chloroform with the temperature (given below) can be applied without grave error. All the densities given are absolute densities, *i.e.* the weight in grms. of one millilitre as weighed *in vacuo*. All percentages are weight percentages. The word "impurity" is used both for desirable and undesirable extraneous substances in chloroform.

THE DETERMINATION OF THE DENSITY.—The determination of the density of chloroform is not such a simple matter as it would seem, one of the chief difficulties being the fixing of the temperature. An error of a tenth of a degree in the temperature will produce an error of about 0·0002 in the density, and chloroform will cool itself by evaporation a degree or more, even in being poured from one vessel to another. The most accurate densities can, no doubt, be obtained by using a specific gravity bottle and a thermostat, but, strange as it may seem for such a very volatile liquid, a much more convenient apparatus is a Westphal balance. This is the apparatus which has been used in the following experiments. A preliminary calibration of the balance is essential to get even the third place of the density right. This can be done by checking the weights of the riders against a standard set of weights, and then working out the exact volume and expansion with temperature, of the plummet, from the observed density of distilled water at different temperatures. In using the balance it is first carefully levelled, with no riders on, in air. It seems, perhaps, unnecessary to mention this, but a series of the earlier experiments was vitiated by the neglect of this precaution, and by assuming that the table on which the balance stood was level. A thermometer, also calibrated, and a stirrer are put in the cylinder holding the chloroform. The riders are then adjusted as nearly as possible to the right places, the chloroform is vigorously stirred, and the oscillations of the balance checked with a small camel hair brush. If necessary, an adjustment of the smallest rider is made to get the balance exactly even, and then the temperature is read to the nearest tenth of a degree. The process is repeated at least six times, giving a series of temperatures and corresponding densities, extending over, perhaps, as much as two degrees. The corrections both for the balance and the thermometer are then applied, the results plotted—the density against the temperature—and the best line of the right slope for the known change in density with temperature drawn through them. The whole process takes ten or fifteen minutes.

As a check on the consistency of the observations the densities of ten different chloroforms were determined, six observations for each of them (60 in all) being taken. The maximum deviation of any observation from the mean was 4 in the fourth place, and this only occurred once. The mean deviation of the whole 60 was 1·3, and the standard deviation 1·6 in the fourth place. A further test of the consistency of the method was the checking from time to time of the density of mixtures, in measured proportions, of chloroforms of which the densities had been determined. In no case, in four such experiments, was the difference between the observed and the calculated density more than 1 in the fourth place. As a check on the absolute accuracy of the method the density of distilled water at the laboratory temperature was determined from time to time, and the result was always within 2 in the fourth place of the density given in Castell Evans's tables (Vol. II., p. 1225). The density of a chloroform was also determined both by means of the bottle, with all possible precautions, and by means of the balance, and the results were the same within 5 in the fifth place. The following density determinations are therefore probably to be relied on as accurate to within 2 in the fourth place ($\pm$ 0·0002).

THE RATE OF CHANGE IN DENSITY WITH TEMPERATURE.—For the reduction of the densities of chloroform, as found by the balance, to some common temperature, one needs to know the rate of change in density with temperature. This—or what comes to the same thing, the expansion of chloroform by heat,—has been determined by Thorpe for pure chloroform (*J. Chem. Soc.*, 1880, 196), and his results work out to:—

$$\begin{aligned} dD/dt = &-0{\cdot}00188 \text{ at } 0^\circ \text{ C.} \\ &-0{\cdot}00189 \quad 10^\circ \text{ C.} \\ &-0{\cdot}00190 \quad 20^\circ \text{ C.} \\ &-0{\cdot}00192 \quad 30^\circ \text{ C.} \end{aligned}$$

From experiments made in this laboratory the following results were obtained:—

For pure chloroform the average rate of change in density per degree centigrade between 5° and 25° C.:—

$$\left.\begin{aligned} &-0{\cdot}00189 \\ &-0{\cdot}00190 \end{aligned}\right\} \text{ in two experiments.}$$

For chloroform containing 1 per cent. by weight of alcohol:—

$$\left.\begin{aligned} &-0{\cdot}00188 \\ &-0{\cdot}00189 \end{aligned}\right\} \text{ in two experiments.}$$

For chloroform containing 5 per cent. by weight of alcohol:—

$$-0{\cdot}00180 \text{ in one experiment.}$$

In this last case special care had to be taken to prevent the chloroform from absorbing water from the air, as with so much alcohol it does so very rapidly. In view of the agreement of the first two with Thorpe's figures, these are probably correct to within one in the last place.

A less reliable determination was made for chloroform containing 1 per cent. of ethyl chloride, and this worked out to:—

$$dD/dt = -0{\cdot}00188 \text{ per degree between } 20^\circ \text{ and } 30^\circ \text{ C.}$$

The difficulty with this was that the solution tended to lose ethyl chloride while its density was being determined. It is, however, sufficient to indicate that the presence of a small proportion of ethyl chloride does not greatly alter the rate of change of density with temperature.

WASHING CHLOROFORM.—Chloroform can be washed free from alcohol by shaking it five or six times with an equal volume of water in a separating funnel, A much more efficient, convenient and economical method is by the use of the apparatus shown in the figure.

The vessel is a separating funnel of about 300 to 400 c.c. capacity. The tube by which the distilled water enters is drawn out to a fine point which is arranged so as to come about $\frac{3}{4}$ inch above the stopcock. The opening at the point must be of such a size that with a head of about two feet of water it will give in the air a

very fine jet and not a series of single drops. The tube by which the wash water is drawn off can be adjusted to different levels by pushing it a longer or shorter way through the cork. The rate of flow of water is regulated by the vacuum pump, and must be fast enough to give clouds of very fine bubbles of water in the chloroform, but the vacuum must not be enough to make the chloroform boil. With the apparatus in use in this laboratory this means that between 10 and 20 c.c. of water run through per minute. Using this apparatus with 140 c.c. of a chloroform containing about 1 per cent. of alcohol it was found that after 100 c.c. of water had run through (6 minutes), 97 per cent. of the alcohol had been removed, and after 200 c.c. of water (12 minutes) the whole of the alcohol. As a general rule, as the rate of running is variable, 20 minutes' washing is recommended. After the chloroform has been washed it is full of very small bubbles of water which take a long time to rise, but which can be removed by filtering through a dry (fat-free) paper. It is convenient to arrange another large separating funnel at a higher level than the washing vessel as a reservoir for the distilled water. This affords an easy means of seeing that the water is running through at a proper rate, and of avoiding the possibility of any chloroform being sucked back when the vacuum is released.

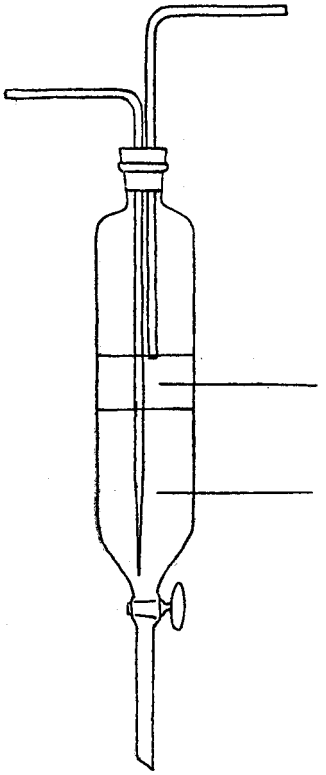

In deducing the amount of alcohol in a chloroform from the density before and after washing one needs to know:—(1) the effect of washing on other substances which may be present; (2) the effect of the water present on the density both before and after washing; (3) the effect of different proportions of alcohol on the density of chloroform.

THE EFFECT OF WASHING ON VARIOUS SUBSTANCES IN CHLOROFORM.—Among the substances possibly present in chloroform on which the effect of washing has been tried are:—

(1) *Acetone.*—This substance has never been found in any of the commercial chloroforms tested for it. This is rather surprising, in view of the common use of acetone in the manufacture of chloroform and of the delicacy of the Scott-Wilson test (Folin, *Lab. Manual*, p. 189). It may be noted, in passing, that this test can be applied direct to chloroform or to a watery extract of it, by dropping a drop of the liquid to be tested into a c.c. or two of the reagent. An immediate white precipitate indicates the presence of acetone. A grey precipitate developing on standing means nothing, and is due to the chloroform itself. If acetone is present, it is removed by washing, though not so rapidly as alcohol. In one

experiment with a chloroform containing about 1 per cent. of acetone, the amount present was reduced to less than 1 in 100,000 by 40 minutes' washing.

(2) *Ethyl chloride.*—If ethyl chloride is present in comparatively large amounts, washing, as indeed any manipulation, or even standing in a not too well stoppered bottle, removes some of it. In one experiment in which a chloroform containing 2·3 per cent. of ethyl chloride was washed—not in the washer described but by shaking with six successive lots of water—the change in density corresponded to a reduction of 1·9 per cent. Keeping this chloroform for ten days (with five density determinations over that time) further reduced the amount of ethyl chloride in it to 1·46 per cent. If, however, ethyl chloride is present only in such amounts as are likely to be found in anæsthetic chloroform, washing removes very little of it. The following experiments show this:—

Per Cent. of ethyl chloride.	Density before washing at 27° C.	Time of washing in minutes.	Density after washing at 27° C.	Difference in fourth place of decimals.
0·50	1·4703	30	1·4703	0
0·34	1·4716	36	1·4717	1
0·22	1·4726	20	1·4729	3
0·21	1·4727	25	1·4729	2
0·18	1·4730	20	1·4731	1
0·11	1·4735	40	1·4737	2
0·07	1·4740	35	1·4744	4
0·07	1·4740	30	1·47 2	2
0·03	1·4744	30	1·4744	0

Average difference 1·7

Although all these differences are within what is thought to be the experimental error of the observations, they are all in the direction of an increase of density with washing, so that it is probable that washing in these concentrations causes a slight loss of ethyl chloride, amounting to about 0·0002 in the density, *i.e.* to about 0·02 per cent. of ethyl chloride. These experiments are not sufficiently accurate to show it, but one would suppose the loss to be greater the higher the concentration. One might take 0·0002 in the density as the average loss for concentrations from 0·05 per cent. to 0·50 per cent.

(3) *Ethyl Carbonate.*—This substance in small concentrations is not removed by washing. In one experiment a chloroform containing 1·30 per cent. of it had the same density (1·4573 at 31° C.) before and after washing for 20 minutes. The ethyl carbonate used for mixing with the chloroform in this experiment was probably not pure, as its density was 0·9662 at 31° C., against the density extrapolated from the recorded figures (Beilstein, III., 8) of 0·9636 at 31° C. It did, however, presumably consist largely of ethyl carbonate, and none of it was removed. Ethyl carbonate is, of course, the substance said to be formed when the phosgene generated by the oxidation of chloroform reacts with the alcohol present.

(4) *Carbon Tetrachloride.*—This seems to be a possible impurity. It is not removed by washing as the following experiments show:—

Per Cent. of carbon tetra-chloride.	Density before washing at 27° C.	Time of washing in minutes.	Density after washing at 27° C.	Difference in fourth place of decimals.
5·56	1·4797	21	1·4797	0
5·56	1·4797	25	1·4800	+3
4·50	1·4786	20	1·4786	0
2·06	1·4767	20	1·4665	−2

All the above densities were taken with the chloroform saturated with water.

THE EFFECT OF WATER ON THE DENSITY OF CHLOROFORM.—Although the chloroform, after washing with water, can be dried before taking its density, it is obviously a great saving of time and trouble to take the density with the chloroform wet, and to determine and allow for the effect of the water. The following experiments show the effect on the density of drying the chloroform by letting it stand over anhydrous potassium carbonate:—

Sample.	Density wet at 27° C.	Time of drying in days.	Density after drying at 27° C.	Difference.	Density after wetting again.
D	1·4746	3	1·4752	6	
		14	1·4750	4	1·4746
E	1·4746	1	1·4753	7	
		2	1·4753	7	
		3	1·4751	5	1·4747
F	1·4746	1	1·4750	4	
		2	1·4750	4	—
G	1·4747	1	1·4752	5	
		4	1·4752	5	—

Average difference 5·2

According to these experiments the addition of 5 to the fourth place of the density of a wet chloroform gives the density of the same chloroform dry. It goes without saying that these results only apply to chloroforms which have no alcohol in them. When alcohol is present the mixture dissolves much more water.

THE EFFECT OF ALCOHOL ON THE DENSITY OF CHLOROFORM.—The difficulty in estimating the effect of alcohol on the density of chloroform is that it is impracticable to attempt to add absolutely anhydrous alcohol. To get over this difficulty various quantities of from 92 to 98 per cent. alcohols have been added to chloroform, and from the effects of the various percentages of alcohol and water together on the density an attempt has been made to calculate the effects of each alone. The following experiments were made:—

1	2	3	4	5	6	7
Per Cent. of alcohol (by weight).	Per Cent. of water (by weight).	Lowering in fourth place of decimals in density at 27° C.	Lowering calculated for no change in total volume.	Difference 4—3.	Lowering due to water.	Lowering due to alcohol 3—6.
0·323	0·027	46	43	3	2	44
0·395	0·008	56	51	5	1	55
0·648	0·054	93	85	8	4	89
0·792	0·016	109	103	6	1	108
0·970	0·030	134	126	8	2	132
0·977	0·082	136	128	8	6	130
1·046	0·008	140	135	5	1	139
1·308	0·110	178	171	7	8	170
1·718	0·035	230	220	10	3	227

The figures in column 4 are the calculated lowerings, on the assumption that no change in total volume takes place when chloroform, alcohol and water are mixed. The differences between the observed lowerings (column 3) and the calculated lowerings (column 4) are not so even as could be wished, but they are all positive, and show, in general, an increase as the proportion of alcohol increases. This indicates that there is a small increase in volume on mixing. The rather arbitrary assumption—but one which seems to fit the figures—that the whole of this increase in volume is due to the alcohol gives columns 6 and 7. Plotting the results in column 7 and taking the best line through them gives the effect of alcohol alone. The mean result of all the observations is that 1 per cent. of alcohol (by weight) lowers the density of chloroform by 134 (*i.e.* by 0·0134). Other percentages up to 1·5 per cent. lower the density in proportion, *e.g.* 0·792 per cent. lowers it by $0{\cdot}792 \times 134 = 106$.

THE EFFECT OF WASHING ON VARIOUS CHLOROFORMS.—The effect of washing on various commercial anæsthetic chloroforms is shown in the following table:—

Brand and sample.	Density before washing at 27° C.	Time of washing in minutes.	Density after washing at 27° C.	Difference.	Per Cent. of water-soluble substances as alcohol.
Brand A.					
Sample 1	1·4635	35	1·4740		
		80	1·4744	109	0·85
2	1·4627	38	1·4743		
		68	1·4745	118	0·92
3	1·4610	45	1·4741	131	1·01
4	1·4688	30	1·4744		
		60	1·4744	56	0·46
5	1·4633	30	1·4743	110	0·86
6	1·4642	30	1·4742	100	0·78
7	1·4629	30	1·4744	115	0·90
8	1·4640	30	1·4740		
		60	1·4742	102	0·80
9	1·4547	21	1·4747	200	1·53
10	1·4637	20	1·4747	110	0·86

(*Continued on next page*).

Brand and sample.	Density before washing at 27° C.	Time of washing in minutes.	Density after washing at 27° C.	Difference.	Per Cent. of water-soluble substances as alcohol.
Brand B.					
Sample 1	1·4620	20	1·4730		
		40	1·4731	111	0·85*
2	1·4618	20	1·4728	110	0·84*
3	1·4622	20	1·4730	108	0·83*
Brand C.	1·4618	20	1·4750	132	1·02
Brand D.	1·4610	20	1·4746	136	1·05

* An allowance has been made for loss of ethyl chloride, *vide supra*.

With the exception of the density in some cases, all the above chloroforms passed the B.P. tests. Brand A is made in some cases, if not in all, from mixtures of other brands by redistillation. The amount of alcohol added to it is very variable, and the variations in density after washing undoubtedly represent variations in composition, and are not experimental errors. Brand B is a chloroform to which the makers state some ethyl chloride is added. Brands C and D are well known brands.

THE REMOVAL OF ETHYL CHLORIDE FROM CHLOROFORM.—A good many methods for the removal of ethyl chloride from chloroform were tried. These included (1) "refluxing," with the condenser water at a temperature (32° to 35° C.) well above the boiling point of ethyl chloride (12·5° C.)—a method which sounds most hopeful but which does not work; (2) "refluxing" with alcoholic silver nitrate solution; (3) treatment with ammonia and subsequent washing, and some others. The only method which, under certain conditions, removed the whole of the ethyl chloride was that of boiling with potassium hydroxide. This method also destroys the chloroform itself, and experiments were made to find the conditions which gave the maximum destruction of the ethyl chloride and the minimum destruction of the chloroform. The method finally evolved was that of "refluxing," and adding a solution of potassium hydroxide (100 grms. of sticks per litre of water) slowly and continuously throughout the whole time of "refluxing." In this way the vapour condensing in the condenser, which is richer in ethyl chloride than the bulk of the liquid, comes in contact with the fresh potassium hydroxide first. The amount of potassium hydroxide solution used is equal to the bulk of the chloroform "refluxed," and the time about 1½ hours—though, perhaps, two hours would be safer. At the end of that time the chloroform is separated from the aqueous layer, washed for 20 minutes in the washer, filtered and its density taken. This process will not remove either ethyl carbonate or carbon tetrachloride. The following experiments show this:—

Nature and concentration of solute.	Density before reflux wet at 27° C.	Time of reflux in hours.	Density after reflux wet at 27° C.	Difference.	Potassium hydroxide used. c.c.
Per Cent. Ethyl chloride.					
0·0	1·4747	1·5	1·4748	1	157
0·04	1·4743	1·5	1·4747	4	84
0·04	1·4743	1·5	1·4747	4	132
0·16	1·4733	1·25	1·4747	14	—
0·17	1·4734	1·42	1·4746	12	147
0·78	1·4675	1·5	1·4745	70	153
0·80	1·4673	2·0	1·4740	—	93*
—	—	3·0	1·4747	74	161
Ethyl carbonate.					
1·3	1·4649	1	1·4646	−3	139
Carbon tetrachloride.					
4·5	1·4786	1·25	1·4786	0	90

* In this experiment the amount of potassium hydroxide used was presumably insufficient.

THE EFFECT OF ETHYL CHLORIDE ON THE DENSITY OF CHLOROFORM.—In these experiments the density of a chloroform was determined, a quantity of it weighed out in a bottle, and a weighed tube of ethyl chloride put in. The whole was then cooled in ice to be below the boiling point of ethyl chloride, and the tube broken by violently shaking the bottle. The density of the resulting solution was then determined as soon as the mixture had again nearly reached the temperature of the laboratory. The broken pieces of the tube were then collected, dried and weighed. The ethyl chloride used was Burroughs and Wellcome's "pure for anæsthesia."

Three experiments were made:—

Per Cent. of ethyl chloride.	Lowering in the density at 27° C.
0·841	0·0077
0·976	0·0088
2·257	0·0212

The mean result of the above experiments is that one per cent. by weight of ethyl chloride lowers the density of chloroform by 0·0092, and other concentrations up to 2 per cent. in proportion.

Another experiment was made to see if the effect of alcohol and ethyl chloride together was the sum of their effects singly. A mixture was made containing:—

		Calc. lowering
Chloroform	97·76	
Ethyl chlor.	0·50	46
Alcohol	1·71	229
Water	0·03	2
	Total	277

The original density of the chloroform wet at 27° C. was 1·4748, and after the addition of these substances it was 1·4473 (difference, 0·0275), so that within the experimental error the lowering calculated is the same as that observed.

THE DENSITY OF PURE CHLOROFORM.—The values for the density of pure chloroform given in various books, when reduced to a common temperature, are found to show the most surprising variations. Two of them, however, giving its density at 0° C., agree very closely, *viz.* Thorpe (*J. Chem. Soc.*, 1880, p. 196) 1·52637, and Timmermanns, etc. (*Compt. Rend.*, 1922, **174**, 365–367) 1·52635. Calculating from this value, using the figures given by Thorpe (*loc. cit.*) for the expansion by heat, the density at 27° C. works out to 1·4752. For wet chloroform this should be reduced to 1·4747 (*vide supra*), and this is the usual figure obtained when alcohol and ethyl chloride are removed from commercial chloroforms. For a sample prepared in this laboratory from chloral hydrate, and subsequently purified and redistilled, the middle portion of the distillate being taken, the density dry at 27° C. was 1·4751, which is within the experimental error of Thorpe's figure. The figure adopted in this laboratory for pure chloroform wet at 27° C. is 1·4747.

THE EFFECT OF OTHER SUBSTANCES ON THE DENSITY OF CHLOROFORM.—The following experiments were made:—

Nature and concentration of solute.	Observed change in final decimals in the density at 27° C.	Calculated change on assumption of no change in total volume.
Carbon tetrachloride 2·1 per cent.	+21	+21
5·7 per cent.	+50	+56
Ethyl carbonate 1·30 per cent.	−98	−98

The figure "50" for the 5·7 per cent. of carbon tetrachloride is probably wrong, and the effect of these substances can be calculated on the no-volume-change assumption. The amounts detectable by the density of the residual chloroform after removal of alcohol and ethyl chloride are 0·3 per cent. upwards for carbon tetrachloride, and 0·03 per cent. upwards for ethyl carbonate.

SUGGESTED ROUTINE.—The above data are by no means so complete as could be desired, but they form a basis. It is suggested that the following routine might usefully supplement the tests given in the B.P. for the examination of anæsthetic chloroforms.

The density of the chloroform is taken. It is washed for 20 minutes in the washer described, filtered, and its density again taken wet. It is then "refluxed" for two hours, an amount of 10 per cent. potassium hydroxide solution about equal to the volume of the chloroform being gradually and continuously added over the whole time of reflux, the chloroform then separated, washed for 20 minutes, filtered, and its density taken wet for the third time. The difference between the first two densities, plus 0·0005 for the water dissolved, and minus 0·0002 if from 0·05 to 0·50 per cent. of ethyl chloride is present, gives a measure of the water-soluble substances—mostly alcohol—and conveniently called "water-soluble substances reckoned as alcohol." This figure will include any water present in

the original chloroform, but will not include any ethyl chloride, ethyl carbonate or carbon tetrachloride. The difference between the second and third densities, plus 0·0002 when from 0·05 to 0·50 per cent. of ethyl chloride is found, gives a measure of the amount of ethyl chloride. The density of the residual chloroform should be within 0·0002 of 1·4747 at 27° C. (for other temperatures *vide supra*), and, if this figure is found, it is an indication that no other impurities are present. If more than 0·03 per cent. of ethyl carbonate, or more than 0·3 per cent. of carbon tetrachloride is present, it will show in this last density except in the unlikely case of their being present in equivalent amounts.

As an example of the method:—A chloroform has an original density of 1·4620 at 27° C. After washing, its density wet was 1·4730. After reflux its density wet was 1·4747. The difference between the first and second densities is 0·0110. To this add 0·0005 for wetness, and subtract 0·0002 for loss of ethyl chloride, making 0·0113. This corresponds to 113/134 = 0·84 per cent. of alcohol. The difference between the second and third densities is 0·0017. To this add 0·0002 for loss of ethyl chloride, making 0·0019, which corresponds to 19/92 = 0·21 per cent. of ethyl chloride. The final density of 1·4747 is correct for pure chloroform. This chloroform therefore contains:—

Water-soluble substances reckoned as alcohol	0·84 per cent.
Ethyl chloride	0·21 ,,
No evidence of other impurities.	

In the preparation of this paper a good many references have been found to literature which is not available in Madras. If any of the experiments duplicate those of others, and no acknowledgments have been made, the author tenders his apologies, and hopes that at any rate he many not be suspected of intentional plagiarism.

CHEMICAL EXAMINER'S LABORATORY,
MADRAS.

DISCUSSION.

Mr. C. E. SAGE said that he wished to criticise the paper from the point of view of the bulk of the chloroform used for the tests. It was customary to put up anaesthetic chloroform in small bottles, and if the whole of one of these were used for testing, the result was no guarantee that all the other bottles were of the same composition. He asked what could it matter if there were more than 0·5 per cent. of alcohol in a sample if it were pure, seeing that it was customary to employ chloroform containing more than that proportion of alcohol. The British Pharmacopoeia specified 2 per cent., and the frequently employed anaesthetic "A.C.E." was a mixture of absolute alcohol one part, chloroform two parts, and ether three parts.

Mr. G. N. HUNTLY commented on the absence from the paper of any mention of the work of Dr. Wade on the subject of alcohol chloroform and acetone chloroform. Dr. Wade had proved that acetone chloroform was pure and that ethyl chloride was present in alcohol chloroform; eventually he had found a means of isolating the ethyl chloride, and his work had been taken up by manufacturers and used extensively during the War.

Mr. WILLIAM PARTRIDGE said that chloroform for anaesthetic purposes was not always provided in 4-oz. bottles, but often in 2-lb. bottles. He thought that the climatic conditions in India, as compared with England, might make a great difference in the figures obtained; more especially he disliked the idea of relying on the specific gravity of chloroform taken by Westphal's balance when fifteen minutes were taken over the determination.

Mr. RAYMOND ROSS referred to the types of specific gravity bottles used, and advocated a type having a tall stopper with a graduated capillary bore; readings for the volume of this bottle filled to various graduations were obtained and recorded once for all, and the bottle filled with the substance to be tested to any given mark was compared with its content when filled to the same mark with water.

Jena Sintered Glass Crucibles.

BY G. D. ELSDON, B.Sc., F.I.C.

(*Read at the Meeting, North of England Section, November* 21, 1925.)

THE author has made use of these crucibles (*cf.* Prausnitz, ANALYST, 1925, **50**, 440) particularly for the weighing of cuprous oxide in sugar determinations, and his experience may be interesting to others.

The most suitable size is 1 b G3/<7 (for which the code word is *utusat*), the coarser, 1 b G3/5 – 7, being only suitable for precipitates such as silver chloride. With tnose of the former size fine precipitates may be completely collected in a reasonable time, but a certain amount of care is necessary in the choice of the crucibles.

For example, one crucible marked <7 was obviously of the coarser type, whilst another had the disc only partly fused to the walls; the crucibles should, therefore, be examined from these points of view, those having a coarse appearance (except for coarse precipitates) or having any spaces between disc and wall being discarded. In the case of the crucibles more or less properly marked <7, great variation in the speed of filtration will be found; some are so slow, even under an almost complete vacuum, that the process is tedious; such crucibles should be discarded, as many filter with reasonable speed, and quite efficiently, at a rate which may be described as a trickle; on the other hand, a few filter so quickly that they are not quite efficient for the finest precipitates. Crucibles can therefore only be selected by actual experience.

Hot alkali, such as used in gravimetric sugar determinations by means of Fehling's solution, acts slightly upon the crucible, producing a loss in weight of the order of three mgrms. For such a purpose, therefore, the crucible need not be weighed until the cuprous oxide has been collected. The crucible is cleaned by means of nitric acid, well washed with hot water, dried and weighed, and the

weight of precipitate is found by subtracting this final figure from the total weight. Alternatively, the cuprous oxide may be dissolved and titrated.

The method would appear quite promising for a number of gravimetric determinations, particularly if the present little difficulties in the matter of want of uniformity of porosity can be completely overcome.

Notes.

The Editor wishes to point out that the pages of the Journal are open for the inclusion of short notes dealing with analytical practice and kindred matters. Such notes are submitted to the Publication Committee in the usual manner.

NOTE ON THE FILTRATION METHOD OF MEASURING THE SEDIMENT IN MILK.

THE filtration method recently described by E. J. Burndred in *The Veterinary Journal* (1925, **81**, 461) for the collection of extraneous sediment from milk has been in use for several years, and many different kinds of apparatus are employed. In its simplest form it consists of a tapering glass cylinder (capacity, 1 pint), to the lower end of which is attached an aluminium rim carrying a loose perforated plate. The cottonwool disc is placed on this perforated plate, and is firmly held when the glass cylinder is placed in position. The milk filters rapidly through the cottonwool, and, after drying, the disc may be mounted as a permanent record.

The method is simple and rapid, and useful results can be obtained for comparison purposes. As a rough sorting test, for example, it is capable of furnishing information to veterinary and sanitary Inspectors in investigations as to the suitability of persons or premises for registration under the Milk and Dairies Act, etc. In the experience of the writer, the method is also useful for giving ocular demonstration, to members of Health Committees, of the unsatisfactory nature of a particular milk-supply; and in serving to put Inspectors on the track of those milk-vendors whose milk should be sampled with a view to a more accurate method of determination of the sediment being carried out. It is advisable that both the preliminary or filtration method, and the final or sedimentation method, should be carried out by the Public Analyst, whose report on the former tests will show which sources of supply should be sampled for further examination.

The filtration method—whatever modification be used—can, however, make no pretensions to being a quantitative process, for the results cannot be expressed in definite figures. In many cases, moreover, the sediment is not wholly removed from the milk, as the finer particles are liable to some extent to be washed through the filter, and occasionally it happens that the under-side of the disc holds much of the deposit. If the residue be washed with water, still greater losses may occur. All filtration methods are thus unfortunately very restricted in utility, because they cannot give results capable of being made the basis of a prosecution under the Sale of Food and Drugs Acts. The collected matters can be neither measured nor weighed, and they cannot readily be examined microscopically unless the amount is considerable, since the deposit is intimately mixed with the cotton fibres of the filter. To the extent indicated in this note, however, the method does give useful information of a preliminary nature.

ARNOLD R. TANKARD.

Notes from the Reports of Public Analysts.

The Editor will be glad to receive the Annual or other Reports of Public Analysts containing matter of interest to the Society. Notes made from such Reports would be submitted to the Publication Committee.

BOROUGH OF PORTSMOUTH.

Annual Report of the Public Analyst for the Year 1924.

During the year ending December 31st, 1924, the total number of samples examined was 1381, of which 1209 were under the Sale of Food and Drugs Acts, this being at the rate of 5·2 samples per 1000 persons. Of the food and drugs samples 18 were inferior and 54 adulterated (4·4 per cent.).

Milk.—Thirteen of the 670 samples examined were inferior and eleven were adulterated. One sample contained 1 part per million of formaldehyde; the vendor was cautioned.

Of the 27 samples of "Certified Milk," 3 were rejected. The average number of bacteria in all the samples was 1,115 per c.c. Seventeen samples of "Grade A (Tuberculin Tested) Milk" contained an average of 1,982 bacteria per c.c. Two samples failed to pass the *B. coli* test and were rejected. Of the 30 samples of "Grade A Milk" examined, 4 were rejected. The average number of bacteria was 8,384 per c.c.

Butter.—Boron preservative was found in 59 samples (50 per cent.) of the butters examined. In no case did the amount, as boric acid, exceed 0·28 per cent.

Margarine.—The doubtful practice of advertising margarine as being "mixed with butter" has now stopped. Of the 27 samples examined, 25 (92 per cent.) contained boron preservative.

Sausages.—Twenty-two samples were examined, and of these, 18 were reported as adulterated. In two cases the sausages were guaranteed to contain 70 per cent. of meat, but did not reach that standard; the vendors were cautioned.

In the case of five other samples there was an excessive amount of boron preservatives, reaching, in one instance, 81 grains per lb. The vendor was fined £10.

Drugs.—Ninety samples were examined, and all were in accordance with the requirements of the British Pharmacopoeia.

Reginald P. Page.

Legal Notes.

Under this heading will published notes on cases in which points of special legal or chemical interest arise. The Editor would be glad to receive particulars of such cases.

USE OF THE TERMS "PORT" AND "SHERRY."

On November 19, 1925, two of a series of summonses were heard by the Birmingham Stipendiary Magistrate (Lord Ilkeston), the offence alleged in each case being that of applying a false trade description contrary to the provisions of the Merchandise Marks Act, of 1887.

Mr. Monier Williams, for the prosecution, dealing with the first summons, said that it was no part of the case that the purchaser was in any way deceived as to the contents of the bottles. Neither was it part of the case that the defendant attempted to pass the liquid off as genuine port. The offence under the Act was intention to infringe the Statute, and not an intention to deceive any particular person who went to buy wine, there being a distinction in this respect between the Merchandise Marks Act and the Food and Drugs Act.

Two bottles had been purchased from the defendant, and the contents of one had been tested by an expert. The labels had the word "Port" in very prominent letters, and underneath in very small letters the word "flavour." Further below was the word "superior," and, in smaller letters still, the description "non-alcoholic." The prosecution asked the Court to disregard everything on the label except the word "Port," and for this course counsel quoted as authority the case of *Reg.* v. *Phillips*, which referred to cigars packed so as to look exactly like Havana cigars, whilst stamped on the outside of the box in small letters were the words "Manufactured in England." The seller was convicted, and the conviction was upheld in the Court of Appeal.

Where, as in the present case, the label was obviously designed to mislead, with the word "Port" in exceedingly prominent letters in order to catch the eye, and the words which might be considered to qualify it in letters so small that they could not be seen at a distance, the Court was entitled and almost bound to say that the description was the prominent word, and that a person could not evade the Act by qualifying the description by some small word which might or might not take away from its effect. Whether the word "flavour" in this particular instance, even if it were in equal prominence, would qualify the word "Port," was extremely questionable, because of the Anglo-Portuguese Treaty Acts passed in 1914 and 1916. In the Treaty Act of 1914 it was laid down that the description Port or Madeira applied to any wine or liquor other than wine the produce of Portugal and the Island of Madeira, respectively, should be deemed to be a false trade description within the meaning of the Merchandise Marks Act of 1887. In the Treaty Act of 1916 wine imported without a certificate issued by the competent Portuguese authority could not be described as "Port" without infringing the Merchandise Marks Act.

Counsel also quoted a case in which action had been taken against the seller of wine labelled "Tarragona Port." The justices had refused to convict, but the High Court had held that if the wine was not the produce of Portugal the word "Port" must be deemed to be a false trade description. In the present case the only term indicating that the wine was not port were the words "non-alcoholic," the smallest on the label.

For the defence it was argued that the words "flavour" and "non-alcoholic" were a clear intimation that it was not port which was being sold; moreover, the purchaser in this case was informed that he was being supplied with "port flavour." The defendant was engaged in a perfectly innocent trade, and had no intention at all of entering into competition with the great firms engaged in the port wine trade.

The Stipendiary said that he was satisfied that an offence had been committed.

One summons relating to sherry was then heard. Counsel for the prosecution said that the facts were precisely similar to those of the preceding case, except that the position of sherry was not defined by statute. He therefore proposed to call the Chairman of the Sherry Shippers' Association to prove what sherry was and what the word "sherry" meant. But whatever sherry was, it was certainly not a non-alcoholic liquid, and no one was entitled to put upon a non-alcoholic

liquid the description sherry. As the sale was intentional and the description false, the offence was complete under the Merchandise Marks Act.

The evidence of the sherry shipper was then given to the effect that sherry was a wine from a certain district in Spain, and derived its name from Xeres, a town in Andalusia. In cross-examination witness admitted that he did not associate vineyards with Small Heath, Birmingham, and did not imagine that anyone purchasing there a liquid marked "non-alcoholic" would expect to get the produce of the Xeres vineyards.

Counsel for the defence said that, in the absence of intention to deceive, no offence had been proved. There was no treaty behind the prosecution with regard to sherry, but, by obtaining a conviction against a small man, too poor to take the case to a higher court, the sherry shippers were trying to put themselves on the same plane as the port shipper.

The Stipendiary said that he found an offence proved, but he did not intend to impose a heavy fine in either case, because he did not think there had been any intention to deceive. The fine would be 40s., with 2 guineas costs, in each of the cases. (*Cf.* ANALYST, 1925, **50**, 338.)

ADULTERATION AND MISBRANDING OF CANNED TOMATOES.

UNITED STATES *v.* A. J. LEWIS.*

ON March 25, 1925, the U.S. attorney for Virginia, acting upon a report by the Secretary of Agriculture, filed in the U.S.A. District Court an information against A. J. Lewis, alleging shipment by the defendant, in violation of the food and drugs act, from the State of Virginia into the State of Ohio, of quantities of canned tomatoes which were adulterated and misbranded. The article was labelled in part "(Can) Potomac Brand Hand Packed Tomatoes. . . . Our Extra Quality."

Examination of the article by the Bureau of Chemistry of the U.S.A. Dept. of Agriculture showed that it contained added water, purée, pulp and juice from skins and cores.

Adulteration was alleged, in that water, pulp, etc., from skins and cores had been mixed and packed with the article, so as to lower and reduce and injuriously affect its quality and strength, and had been substituted in part for hand-packed extra quality tomatoes, which the said article purported to be.

Misbranding was alleged for the reason that the statements "Hand Packed Tomatoes" and "Our Extra Quality," together with the design of a fresh ripe tomato borne on the labels, were false and misleading, in that they represented that the article consisted of selected tomatoes of extra quality, and for the further reason that the article was labelled so as to deceive and mislead the purchaser into the belief that it consisted of selected tomatoes of extra quality, whereas it did not, but did consist of a product composed in part of added water, added purée, pulp and juice from skins and cores.

On April 20, 1925, the defendant entered a plea of guilty to the information, and the Court imposed a fine of $100.

* U.S. Dept. Agriculture. Service and Regulatory Announcements. Bureau of Chemistry. Supplement N.J. No. 13487.

Department of Scientific and Industrial Research.

FOOD INVESTIGATION BOARD.

Special Report No. 8.

THE MEASUREMENT OF HUMIDITY IN CLOSED SPACES.*

THE present report deals primarily with methods of measuring humidity, and gives an account of experiments on existing types of hygrometers, with a description of novel methods and instruments designed to meet special requirements. It is expected that a further report will be issued later. The methods employed for the control of humidity are described, and control by the water spray method; by calcium chloride solution of appropriate concentration; by air bubbling through sulphuric acid; by Lindley's method of revolving lead plates in concentrated sulphuric acid, and special methods for small volumes are discussed. Standardisation of the various forms of hygrometers, particularly at low temperatures, was found to be difficult. The ordinary chemical methods were too tedious, and a volumetric form of chemical hygrometer described by Rideal and Hannah was used (ANALYST, 1915, **40**, 41), in which the sample of air under test is kept in a moisture-free bulb during the measurements of the contraction in volume. Experiments with the *Ventilated Wet and Dry Bulb Hygrometer* are described, but the *Dew-Point* method was found to be the most convenient of all methods for low temperature work; it has a sound theoretical foundation, and various industrial types of instrument were experimented with, such as the wall fixture type, portable form, and distant reading type (*cf.* Frederick, ANALYST, 1925, **50**, 220). The *Hair Hygrometer* has the advantage of being a direct reading instrument, but, under ordinary variations of humidity and temperature and in normal working conditions, there is a tendency for high readings to be recorded with lapse of time, and the hairs must be safeguarded from undue strain.

A Combined Hair Hygrometer and Dew-Point apparatus was tested, and it was found that the dew-point apparatus worked satisfactorily out of draughts, and efficiently checked the hair hygrometer, which, if not subjected to large changes of temperature and humidity, appeared to preserve its calibration for several months within 2 to 3 per cent. of the true reading. The hair shows a definite elongation when the temperature is lowered 25° C. from room temperature, which corresponds to an alteration in humidity of the order of 10 per cent. It is desirable to check the hygrometer at one or two points (the calibration lines are approximately parallel) against the dew-point apparatus after any change of conditions. The change of temperature in dry cotton wool exposed to a damp atmosphere is made use of in an electrical resistance *Cotton Hygrometer*. It is difficult, however, to obtain satisfactory results when the humidity of the atmosphere is near saturation.

The *Hot Wire Hygrometer* depends upon the fact that the thermal conductivity of the surrounding gas determines the heat loss from a wire, and it would be necessary to make very accurate resistance measurements when the wire and its insulation were exposed to a humid atmosphere. It is necessary to avoid formation of a moisture film on the wire, and also to eliminate carbon dioxide, since,

* Obtainable at Adastral House, Kingsway, W.C. 2. Price 2s. 0d. net.

volume for volume, carbon dioxide has a greater effect on the thermal conductivity of the atmosphere than water vapour. As, however, there appears to be no absorbent for carbon dioxide that will not disturb the moisture content, it is necessary to determine the conductivity of the air containing the carbon dioxide and water vapour, then saturate, and re-determine the conductivity. D. G. H.

Comparative Tests of Instruments for Determining Atmospheric Dusts.

U.S.A. PUBLIC HEALTH BULLETIN, 1925, No. 144.

COMPARATIVE tests of air dustiness were made with the following instruments:—(*a*) The sugar tube, (*b*) Palmer's apparatus, (*c*) the konimeter, (*d*) the paper thimble, (*e*) the determinator, and (*f*) the impinger. The dusts—mechanically distributed—were in a gas chamber ($10 \times 12 \times 8\frac{1}{2}$ ft. high), which was thoroughly cleaned after each test, and the atmosphere stirred by a fan until the dusts were thoroughly dispersed. In some cases the fan was stopped, in others not, before the tests were made. The amount of dust in suspension was found by weighing the duster before and after establishing the clouds, and the kinds of dust used were:—(1) Metallic iron dust; (2) grain elevator dust; (3) silica rock dust; (4) limestone, and (5) coal dust (Pennsylvania anthracite). The intakes of the various instruments were grouped close together, and the instruments (*a*), (*b*), (*d*), (*e*), and (*f*) were operated for 15 minutes each simultaneously, and the konimeter was snapped at intervals of 2 minutes.

(*a*) *The Sugar Tube.* This tube was first used by Frankland to determine bacteria in the air (*Phil. Trans. Roy. Soc.*, 1886, **178**, 113–152); it depends on the aspiration of air, by means of a calibrated piston pump, through the sugar tube. Subsequently the apparatus was used for hygienic investigations (Higgins, Lanza, Laney, and Rice, "Siliceous dust in relation to pulmonary diseases among miners" *U.S.A. Bureau of Mines Bull.*, 1917, No. 132). This apparatus was found to be unsatisfactory for iron dust, because of changes in the dust due to corrosion and solution in water; for grain dust, owing to excessive time in filtration of the cold sugar solutions; and for limestone, on account of solubility of the dust. It was satisfactory for coal dust and particularly for silica dust, but error due to impurities in the sugar is the greatest disadvantage.

(*b*) *The Palmer Water Spray Apparatus.* This was first described in 1916 by Palmer ("A new sampling apparatus for the determination of aerial dusts," *Amer. J. Public Health*, 1916, **6**, 54–55). The air is drawn through 40 c.c. of dust-free distilled water in the tube at the bottom of the pear-shaped sampling bulb by means of a fan operated by a motor at a regulated speed. The air thus drawn through the water in the trap breaks the water into spray in the sampling bulb, which washes out the dust and causes it to be retained. After a sufficient volume of air has been passed through, the power is shut off, the water drained from the bulb into a flask and the bulb rinsed out. No difficulties were encountered due to types of dust used, but soluble dusts could only be determined on a weight basis, after evaporation or precipitation.

(*c*) *The Konimeter.* In this apparatus, designed by Kotze (*Final Rpt. of the Miners' Phthisis Prevention Com., Union of S. Africa,* 1919, March 10), a small volume of air at high velocity is caused to impinge against a sticky glass plate. The particles adhering to the plate are counted by adjusting it on a microscope stand; an 8 mm. objective and 10 diameter ocular are used, and the counting made at a 200 diameter magnification. This instrument was not found satisfactory for dust counts in excess of 600–800 particles per c.c., and the results became increasingly inaccurate with larger proportions. Silica particles, being transparent, caused some trouble to read.

(*d*) *The Paper Thimble.* The paper thimble was first used to determine dust suspended in blast furnace gas by Brady and Touzalin (*J. Ind. Eng. Chem.*, 1911, **3**, 662–670). In the present investigation Whatman extraction shells provided the thimbles, into which were put cottonwool well fluffed out. The thimble was held in position by a collar in a brass capsule, and suction was applied either by electric power, or by the calibrated foot pump used with the sugar tube, and the dust laden air was drawn through. Filtering efficiency was 100 per cent. with starch of particles about 15 μ diameter, and 46 per cent. with tobacco smoke, with particles of 0·27 μ diameter. Weight, not the number of particles, is determined in this apparatus, and the dust is collected for examination of, for example, explosibility.

(*e*) *The Determinator.* This apparatus, devised by F. P. Anderson and O. W. Armspach (*J. Amer. Soc. Heat and Vent. Eng.*, 1922, **28**, 533–544), is still to be regarded as tentative; it is based on the property of dust to clog filters and thus increase the resistance to air passage, which can be read on a manometer. The filter (analytical filter paper) is clamped in a flanged union, and a water manometer measures the drop in static pressure through the filter. The air is drawn through by a motor-driven rotary pump, and there is a flow-meter with an overflow suction regulator. Results appeared to vary in a way fairly representative of the dust conditions.

(*f*) *The Impinger.* This instrument was devised during the course of the comparative experiments, to combine the principle of collecting dust by impingement with a water washing or bubbling method (L. Greenburg and G. W. Smith, *U.S. Bureau of Mines, Rept. of Investigation,* No. 2392, Sept., 1922). Air enters through a single glass tube sealed at the bottom at right angles to the walls, and the seal is perforated with 15 holes, each about 0·8 mm. in diameter, and kept by lugs 0·8 mm. above the bottom of the containing wide-mouthed conical flask, in which is placed 200 c.c. of distilled dust-free water. A rubber stopper holds the tube, together with a second glass tube for applying suction, in position in the conical flask, and a flow-meter is placed between the impinger and the rotary suction pump. Four such flasks were used for taking consecutive samples, and the impinger adjusted to each in turn, after being washed free from adhering dusty water. The samples were washed through a screen with openings of 50 μ, and diluted in 500 c.c. volumetric flasks, and then analysed for weight of dust and number of particles. Results, in general, were satisfactory.

As a result of the comparative tests made, taking the dust caught by the Palmer instrument as unity, the instruments (not including the konimeter and determinator) were classified in the following order. On the basis of numbers of particles determined: impinger, 5·0; sugar tube, 2·1; and Palmer apparatus, 1·0. On the basis of weight of dust determined: impinger, 2·1; sugar tube, 1·6; thimble, 1·5; and Palmer apparatus, 1·0.

D. G. H.

Ministry of Health.

Circular 659.

CONTAMINATION OF APPLES BY ARSENIC.

THE following Circular has been sent by the Ministry to the Clerks of Authorities administering the Sale of Food and Drugs Acts, and of Port and certain other Sanitary Authorities (England and Wales):—

SIR: I am directed by the Minister of Health to say that his attention has recently been drawn to the presence of considerable quantities of arsenic on the surface of certain imported apples. Two cases of arsenical poisoning have been traced to the consumption of imported Jonathan apples, and a number of samples of these apples which have been examined have shown various amounts of arsenic ranging up to 1/10th of a grain per pound.

The contamination of apples by arsenic has been occasionally reported for a number of years, but the quantities of arsenic found by analysis on former occasions have generally been insignificant, and until recently no cases of illness have been traced to the consumption of such apples.

The amount of arsenic is liable to be especially large in apples grown in dry foreign climates where the apples are repeatedly sprayed during growth and the rainfall is not sufficient to wash off the deposit.

The Minister understands that importers of apples from the regions concerned are taking such steps as are possible to secure the removal of the contamination from future consignments, but he desires to urge upon local authorities the necessity, especially during the next few weeks, of making full use of their powers under the Sale of Food and Drugs Acts, the Public Health Acts and the Public Health (Imported Food) Regulations to protect the public by the examination of samples of apples likely to be affected, and by arranging for the withdrawal from sale of those which are found to be dangerously contaminated.

I am, sir, your obedient servant,

R. B. CROSS (*Assistant Secretary*).

21st December, 1925.

ABSTRACTS OF PAPERS PUBLISHED IN OTHER JOURNALS.

Food and Drugs Analysis.

Determination of the Total Solids of Bread. R. Hertwig and L. H. Bailey. (*J. Assoc. Off. Agric. Chem.*, 1925, **8**, 585–591.)—The U.S. Department of Agriculture definitions and standards for wheat bread, milk bread, and rye bread, stipulate that they shall contain, "one hour or more after baking, not more than 38 per cent. of moisture, as determined on the entire loaf or other unit." The present method for the determination of moisture in these products directs that the sample be reduced to pass a 60-mesh sieve. Since serious loss of moisture would occur during such reduction of the bread, it is evident that the method does not give the true moisture of the entire original loaf. The following procedure is therefore proposed:—The whole loaf is weighed, and cut into slices 2 to 3 mm. thick: these are allowed to dry at ordinary temperature for twenty hours, broken into fragments, and dried further. The whole is re-weighed, then ground to pass

a 20-mesh sieve, and bottled. The residual moisture in this powder is then determined by drying 2 grms. for five hours at 100° C. under reduced pressure (25 mm.), or for three hours at 117° C. under ordinary pressure. A simple calculation gives the moisture content of the original loaf. W. P. S.

Effect of Low Temperatures on Hens' Eggs. T. Moran. (*Proc. Roy. Soc.*, 1925, **98**, B, 436–455.)—The white of an egg after freezing and thawing has become separated into a fluid part and a viscous part. It is the temperature reached, as distinct from the freezing rate, which controls the bulk of the change. Precipitation or coagulation was observed only when the white had been stored in the frozen state for long periods. Thus, after four months' storage at −3° C. the viscous portion of the white showed indications of coagulation. When egg yolk is frozen within the temperature limits of −0·65° C. and −6° C., normal fluidity is regained on thawing, but if the yolk is kept for some time below −6° C. it will be found, when thawed, to have changed into a stiff putty-like mass. This change occurs even though the yolk is first of all frozen within the labile limit of −0·65° to −6° C. The freezing and thawing cycle is also accompanied by permanent changes of volume. Eggs supercooled to −11° C. do not suffer any visible change, but an irreversible change is indicated by a decrease in volume. The change of state in frozen yolk appears to be due to the precipitation of lecithovitellin, so that re-solution does not occur on warming. When cooled below 0° C. eggs quickly lose their fertility, and the experiments cited show that the embryo of the egg dies immediately at about −6° to −7° C. The optimum temperature for fertile eggs is about 8° to 10° C. At 8° C. incubations were obtained from eggs up to a limiting storage time of 39 days, whilst at 16·2° C. the maximum time was 29 days.

Combination of Proteins, Amino-Acids, etc. (in Milk), with Acids and Alkalies, and their Combining Weights. L. J. Harris. (*Proc. Roy. Soc.*, 1925, **97**, 364–386.)—A protein in solution may be determined volumetrically by measuring the amount of hydrochloric acid (or alkali) necessary to titrate a given volume of the solution from one definite value of P_H to another, a correction being applied for the amount of the acid or alkali required in a hypothetical blank free from protein, this being taken to the same value of P_H and to the same final volume. The correct volume of acid (or alkali) is strictly proportional to the amount of protein present.

The principal constituents of cows' milk which act as buffers on addition of hydrochloric acid are casein, lactalbumin, and the salts of phosphoric and citric acids. Proportional summation of the separate P_H-acid combination curves for these constituents gives for the whole milk a curve in excellent agreement with that determined experimentally. Since, in normal commercial cows' milk, the content of the ash is directly proportional to that of the protein, and the percentages of lactalbumin and casein are also constantly related, the buffer value of normal cows' milk should be directly proportional to the amount of protein present. This conclusion is confirmed by the results obtained with milks and with

modified milks containing water, cream, sugar, etc., in widely varying amounts. Thus, for the determination of protein in milk, the following procedure may be used: Small successive amounts of 0·1 *N* hydrochloric acid are run from a burette into a given volume of milk, and the value of P_H determined after each addition. Three or four such readings suffice, as the curve connecting P_H and volume of added acid is virtually linear. The amount of acid required to change the P_H of the milk from one to another definite value is directly proportional to the amount of protein present. If 10 c.c. of the milk are used, the number of c.c. of 0·1 *N* acid necessary to alter the P_H from 6·65 to 5·2 is numerically equal, within 0·1 per cent., to the percentage of protein in the milk. The values of P_H utilised should lie between 6·7 and 4, since at higher acid values the blank correction becomes of importance. T. H. P.

Preparation of Butter Samples for Analysis. L. C. Mitchell and S. Alfend. (*J. Assoc. Off. Agric. Chem.*, 1925, **8**, 574–585.)—The following treatment of butter samples is proposed in order to obtain a homogeneous sample for the determination of moisture, fat, etc. From 250 to 300 grms. of the sample are heated gently in a closed vessel until about one-half of it is melted, and then stirred with a milk mixer for three minutes, with an up-and-down movement of the stirrer. The final temperature must be between 31° and 34° C., at which temperature the butter will completely wet the sides of the container. If the temperature is below 31° C. the stirring must be continued until this temperature is reached, whilst if the temperature is above 34° C. the mass must be cooled until it is solid, and the heating and mixing then repeated (*cf. Allen's Organic Analysis*, 1924, II, 393, *et. seq.*). W. P. S.

Shea Butter. R. Ehrenstein. (*Chem. Zeit.*, 1925, **49**, 799–800.)—The fatty acids of the saponifiable portion of shea butter have m.pt. 55·5° C., and iodine value 50·8. These acids consist solely of stearic and oleic acids, the solid acids having m.pt. 68·5° C.; only slight traces of volatile acids are present. The unsaponifiable portion of the butter contains a phytosterol, m.pt. 149° C., together with alcohol-soluble and alcohol-insoluble constituents, having the respective formulae, $C_{42}H_{72}O_3$ and $C_{84}H_{144}O_6$. The polymerisation of the former into the latter proceeds spontaneously and is accelerated by rise of temperature; it is accompanied by disappearance of the linking C:C. The acetyl values of both of these constituents are about 90 and relate only to secondary alcoholic groups. T. H. P.

Refractometry as an Aid to the Investigation of Fruit Juices. H. Eckart. (*Zeitsch. Unters. Nahr. Genussm.*, 1925, **50**, 196–204.)—Provided that fruit juices are available in fresh condition, an indication of the presence of added water may be obtained by determination of the refractive index, the sugar refractometer being suitable for this purpose. If the juice has been subjected for a few days to a relatively high temperature, so that fermentation has commenced, the refractive index will be lowered. The following table gives the averages of a

number of observations, but more experimental data are required before it becomes possible to prepare special refractometric scales indicating directly the extent of the watering.

Raw juice from	Condition.	Temperature °C.	Specific gravity.	Refractive index at 20° C.
Raspberries	fresh	16	1·0259	1·3427
	preserved	8	1·0119	1·3382
Agriot cherries	fresh	18	1·0724	1·3622
	preserved	8	1·0224	1·3451
Currants	preserved	8	1·0330	1·3439
Bilberries	do.	11	1·0009	1·3400
Blackberries	do.	11	1·0091	1·3380
Cranberries	fresh	10	1·0395	1·3476

T. H. P.

Detection of Tannin in Fermentation Vinegar. G. Reif. (*Zeitsch. Unters. Nahr. Genussm.*, 1925, **50**, 192–195.)—Vinegar made from wine, fruit wine, malt or honey is distinguished by the presence of acetylmethylcarbinol, but fermentation vinegar in general is characterised best by its content of tannin, which may be detected in the dilution of 1:500,000 by means of the following reagent:—Three grms. of sodium tungstate, 2 grms. of sodium phosphate, 0·05 grm. of molybdic acid, and 25 c.c. of water are heated together on a water-bath until solution is complete, the mixture being then cooled and rendered exactly neutral to litmus paper by addition of concentrated nitric acid. Ten c.c. of the vinegar, 0·5 c.c. of 10 per cent. hydrochloric acid, and 1 c.c. of the reagent are heated rapidly to incipient boiling and then allowed to cool; the presence of tannin is indicated during the heating by the appearance of a violet coloration, which attains its maximum intensity after about two hours, and is stable for a long time. Coloured vinegar should be diluted fivefold, and vinegar essence to a content of 10 per cent. of acetic acid before testing. T. H. P.

Primeverose and Rhamnicogenol, the Products of Enzymic Hydrolysis of Rhamnicoside. M. Budel and C. Charaux. (*J. Pharm. Chim.*, 1925, **117**, 427–436.)—The enzyme-containing powder from *Cornus sanguinea* L. hydrolyses rhamnicoside to primeverose and rhamnicogenol, although both it and the glucoside are nearly insoluble in water. The two products were obtained pure, the primeverose being identified by its rotatory and reducing power, and the rhamnicogenol was recrystallised from ethyl acetate solution. Rhamnicogenol does not give the characteristic violet-blue colour of rhamnicoside on shaking a suspension in the presence of traces of alkalis, but gives a rose colour with a green fluorescence. It is a pentahydroxymethyl anthranol, readily oxidising in the presence of alkalis to a pentahydroxymethyl anthraquinone. So far, rhamnicoside has not been found in the six species of *Rhamnus* devoid of spines. The bark of the purging buckthorn contains an enzyme that will hydrolyse rhamnicoside. D. G. H.

Adulteration of Saffron. G. Pierlot. (*Ann. Falsificat.*, 1925, **18**, 464–468.)—Proportions of 3 to 5 per cent. of stamens in the saffron (which consists of the three red stigmata of *Crocus sativa* with a proportion of style) may be regarded as

normal. Samples sold as saffron have been found to consist of the petals of *Cynara cardunculus* treated with sodium glyceroborate and potassium nitrate, and coloured red. This product can be distinguished from true saffron by the fact that it colours water red instead of yellowish green, and that the particles on expansion in water have a different shape. Further, true saffron imparts only a potassium lilac colour to a bunsen flame, whilst with the spurious article a bright yellow colour is produced. The colour of the flame is affected even if sugar is the only adulterant. By the process of osmosis a solution of borax and potassium nitrate with glycerin may be absorbed into the stigmata of the saffron to about 40–60 per cent. The determination of nitrogen is important in all suspicious cases, and it is advisable to eliminate all nitric nitrogen by means of ferric chloride and hydrochloric acid by Warington's method. In the case of an abnormally high figure for nitrogen (*e.g.* 2·55, 2·93 per cent.) the presence of pollen is to be suspected (*cf.* ANALYST, 1916, **41**, 278; 1923, **48**, 389). D. G. H.

Volumetric Method of Assaying Mercuric Iodide, Mercuric Chloride and some other Mercury Compounds. S. Ellman. (*Amer. J. Pharm.*, 1925, **97**, 672–674.)—About 0·5 grm. of mercuric iodide, dried to constant weight over sulphuric acid, is dissolved in about 10 c.c. of a 20 per cent. solution of potassium iodide, the volume made up to 50 c.c. with distilled water, the solution saturated with hydrogen sulphide, and the precipitate left to settle. After filtering and washing until the washings do not affect lead acetate paper, the filter paper and precipitate are transferred to a 250 c.c. flask, and 10 c.c. of 20 per cent. potassium iodide solution and 30 c.c. of 0·1 *N* iodine solution added. The flask is closed with a paraffined cork carrying a glass tube connected with a 50 c.c. flask containing 10 c.c. of 10 per cent. potassium iodide solution. The larger flask is heated on a water bath for about 30 minutes, with shaking, until no more black particles are seen. After cooling, and washing the tube and cork with potassium iodide solution, the contents of both flasks are titrated with 0·1 *N* sodium thiosulphate solution, $HgS+I_2=HgI_2+S$; $HgI_2+2KI=K_2HgI_4$. The method may be applied to other mercury compounds, such as mercuric chloride, ammoniated mercury, Donovan's solution, and Mayer's and Nessler's reagents. It is important to avoid incomplete precipitation of the mercury from a too concentrated solution, or formation of a colloidal suspension in a too dilute one. D. G. H.

Bio-assay of Drugs. J. C. Munch. (*J. Assoc. Off. Agric. Chem.*, 1925, **8**, 556–558.)—For aconite preparations the method consists in injecting a solution subcutaneously into guinea pigs weighing between 275 and 325 grms. each; the standard dose must kill within six hours at least two out of every three animals injected. The lethal doses as established, per grm. body weight of guinea pig, are as follows:—Crude drug, 0·00004 grm.; aconitine, 0·000000055–65 grm.; tincture, 0·00035–45 c.c. In the case of *Cannabis sativa* preparations the use of a standard fluid extract is necessary; 0·03 c.c. of a fluid extract or 0·004 grm. of a solid extract, when administered in gelatin capsules to dogs by mouth, should give the same degree of incoordination within a period of one hour as is produced by

a dose of 0·03 c.c. per kilogrm. per body weight of the standard extract. The "one hour" frog method is used for digitalis, strophanthus and squill preparations. Frogs stored at temperatures below 15° C. are kept at 20° C. overnight and placed in running water at 20° C.; doses of the preparations, properly diluted and de-alcoholised when necessary, are injected into the ventral lymph sac. Exactly one hour later the frog is pithed and the condition of the heart determined. If a sufficient dose has been given, the heart will be stopped firmly with the ventricle in systole and both auricles in diastole. To ascertain the variation of the frogs used, experiments are made with ouabain at the same time. A definite figure is specified for the minimum systolic dose of ouabain. In case the test shows a different minimum systolic dose for the frogs used, the values for the digitalis preparations are altered accordingly. The minimum systolic doses, per grm. of body weight of frog, are as follows:—Ouabain, 0·0000005 grm.; digitalis tincture, 0·0055–65 c.c.; strophanthus tincture, 0·000055–65 c.c.; squill tincture, 0·0055–65 c.c. For epinephrine samples the effect on the blood pressure of dogs is employed. A 1 : 100000 epinephrine hydrochloride solution in physiological salt solution is injected into the femoral vein of a dog, and the rise in blood pressure is measured by a mercury manometer connected with the carotid artery. The same rise in pressure is produced as that which follows the injection of standard epinephrine solution into the same animal. For ergot preparations the desired effect is a certain degree of blueing in the comb of a single-comb white leghorn cock corresponding in intensity with the blueing produced by the same dose of a standard fluid extract of ergot. The injections are made deeply into the breast muscles and the effects are observed after one hour; the standard extract produces distinct blueing in a dose of 0·5 c.c. per kilo of body weight. Pituitary solutions are tested by determining the doses that produce the same contraction of an isolated uterus of a guinea pig weighing between 175 and 350 grms. as is produced by a solution, 1 c.c. of which contains 0·005 grm. of a standard, dried, de-fatted and powdered posterior pituitary gland. (*Cf.* ANALYST, 1923, **48**, 303.) W. P. S.

Solubility of Cooking Vessel Metals and Determination of the dissolved Metals. K. K. Järvinen. (*Zeitsch. Unters. Nahr. Genussm.*, 1925, **50**, 221–225.)—The action on various metals of (1) 5 per cent. sodium chloride solution, (2) 1 per cent. hydrochloric acid solution, and (3) a solution containing 400 grms. of sugar and 15 grms. of citric acid per litre has been investigated. The liquid (40, 60 or 100 c.c.) and a roll of the polished sheet metal (7 × 7 cm.) were placed in a cylinder immersed in a boiling water-bath for 3 hours, the volume of the solution being kept constant. The following amounts of metal, in mgrms., per kilo of solution, were dissolved after 3 hours:—

	Iron.	Copper.	Tin (aver.)	Nickel.	Aluminium.	Brass.	Muntz metal.	Iron alloy.
In citric acid and sugar solution—	148	5	3·6	8·3	115	1·7Cu; 0·7 Zn	2·4Cu; 0·8 Ni	8·0 Fe
In 5 per cent. HCl—	6	5	2·3	0·6	2·5	2·8Cu; 1·9 Zn	2·8Cu; 0·08 Ni	3·3 Fe

T. H. P.

Biochemical, Bacteriological, etc.

Preparation, Solubility and Specific Rotation of Wheat Gliadin. D. B. Dill and C. L. Alsberg. (*J. Biol. Chem.*, 1925, **65**, 279–304.)—The solubility of gliadin in certain solvents, its specific rotation in certain solvents, and its denaturation by alcohol have been studied. Gliadin preparations of unusual purity have been obtained. The essentially new features of the method of preparation followed are : (*a*) Precipitation in aqueous solution is made, with vigorous shaking, so that the gliadin is precipitated in a foam, and hence can be washed thoroughly ; and (*b*) lithium chloride is used instead of sodium chloride to promote precipitation, thus making a practically ash-free preparation possible. The five gliadin preparations obtained had an average nitrogen content of 17·54 per cent. Gliadin may be irreversibly altered under certain conditions with suitable alcohol-water mixtures. The significance of this observation in connection with the determination of gliadin and the isolation of glutenin is discussed. When a solution of gliadin in alcohol-water is cooled, turbidity appears at a definite temperature which varies with the proportion of alcohol in the solvent, but is practically independent of the concentration of gliadin, and may be called a critical peptisation temperature. Gliadin is peptised at room temperature in a narrow range of methyl alcohol and water mixtures ; in a wider range of ethyl alcohol and water mixtures ; and in a much wider range of *n*-propyl alcohol and water mixtures. The critical peptisation temperatures of gliadin in each of these mixtures were determined. There appears to be no upper limit to the solubility of gliadin in these mixed solvents above the critical temperature. The critical peptisation temperature curves of the five gliadin preparations in ethyl alcohol and water mixtures are similar in form. The lowest temperature on each curve corresponds to a concentration of about 60 per cent. of alcohol by volume in the solvent. Many new solvents for gliadin have been found. The specific rotation of pure gliadin in ethyl alcohol and water solutions has been redetermined. With solvents containing 70, 60 and 50 per cent. alcohol by volume, $[\alpha]_D^{20}$ was $-89{\cdot}8°$, $-91{\cdot}0°$, and $-90{\cdot}3°$, respectively, indicating a maximum rotation in 60 per cent. alcohol, instead of, as Mathewson reported, a rotation which increases with the percentage of water in the solvent. These values were determined on solutions prepared at 40° C. which had been standing for 12 hours or longer. Readings made on these solutions immediately after preparation gave slightly higher rotations, but the conditions under which the change took place could not be determined. Solutions prepared at room temperature showed no muta-rotation. The specific rotation of gliadin increased considerably over a temperature range from 20° C. up to 50° C. in solvents containing 70, 60 and 50 per cent. alcohol by volume. The specific rotation of gliadin in *n*-propyl alcohol and water at 20° C. averaged $-98{\cdot}2°$, and did not vary much with the proportion of water in the solvent. Heating a 30 per cent. aqueous urea solution of gliadin for 7 days at 37° C. did not alter the specific rotation of $-116{\cdot}5°$. The formation by urea and gliadin of an alkali albuminate seems unlikely, since no racemisation took place. P. H. P.

A More Specific Reagent for Determination of Sugar in Urine. J. B. Sumner. (*J. Biol. Chem.*, 1925, **65**, 393–395.)—The dinitrosalicylic method of Sumner (*J. Biol. Chem.*, 1924, **62**, 287) for the sugar of normal urine gives high results, due largely to the phenols present in the urine, which increase the colour given by glucose. When the dinitrosalicylic reagent has phenol added to it the colour produced upon heating with glucose is unstable and changes in quality upon standing in contact with the air. Sodium bisulphite prevents this change. The dinitrosalicylic reagent is now prepared by adding to it both phenol and sodium bisulphite, and is found to be satisfactory for the determination of sugar both in normal and in diabetic urine. It will keep for over a month, if not longer, and seems to be almost completely specific for reducing sugars. It is prepared as follows:—To 10 grms. of crystallised phenol add 22 c.c. of 10 per cent. sodium hydroxide solution. Dissolve in a little water, and dilute to a volume of 100 c.c. Weigh out 6·9 grms. of sodium bisulphite, and add to this 69 c.c. of alkaline phenol solution. Now add a solution containing 300 c.c. of 4·5 per cent. sodium hydroxide, 255 grms. of Rochelle salt ($KNaC_4H_4O_6.4H_2O$) and 880 c.c. of 1 per cent. dinitrosalicylic acid solution. Mix and keep tightly stoppered in well filled bottles. Purification of the urine by shaking with charcoal is not necessary; the charcoal adsorbs some sugar. Pipette into a Folin-Wu sugar tube 1 c.c. of urine (diluted if necessary) and 3 c.c. of the reagent. Mix and heat 5 minutes in boiling water. Cool for 3 minutes in running water, dilute to 25 c.c., mix and compare in colorimeter with standard prepared with 1, 0·5, or 0·25 mgrm. of glucose according to the concentration of sugar in the urine. Concentrated urines, containing over 0·18 per cent. of sugar, or dilute urines, containing over 0·12 per cent. of sugar, can be considered abnormal. P. H. P.

Preparation of Myoalbumin by the Acetone Method, its Principal Properties. M. Piettre. (*Compt. Rend.*, 1925, **181**, 737–739.)—A method is described in detail for the separation of myoalbumin from muscular plasma. The presence of proteins, fatty matters and mineral salts hinders the separation. By defecation of the muscular plasma with ether, in the cold, the heavy organic and mineral substances are precipitated. The filtrate is treated with acetone at a low temperature, and the precipitate thus formed is dried, dissolved in water, left in the cold, agitated with ether and filtered. This is repeated, and the solution then contains almost pure myoalbumin, the fatty matters, mineral salts and proteins having been removed. Pure solid myoalbumin is obtained by fractional precipitation with alcohol. A table shows the results of a separation. The properties of myoalbumin closely resemble those described for serum-albumin, lactalbumin and ovalbumin. The aqueous solution is limpid, refractive and of a light, champagne colour. The substance is a light-coloured syrup, which congeals on contact with ice and melts again with the warmth of the hand. The three following characteristics distinguish it especially from serum-albumin:—(1) Coagulation begins about 45–47° C., and continues up to 69–71° C.; (2) Coagulation does not assume a granular form, but is in little clots which form a mass and

contract with rise of temperature; (3) the specific rotatory powers are half those of serum-albumin, as is shown by the following average results:

Ox myoalbumin	.. ..	$\alpha_D = -27{\cdot}39°$
Calf ,,	.. ..	$\alpha_D = -27{\cdot}05°$
Pig ,,	.. ..	$\alpha_D = -30°$
Goose ,,	.. ..	$\alpha_D = -26{\cdot}40°$

Subcutaneous inoculations into rabbits have shown that, like other pure albumins, myoalbumin produces only few and unimportant anaphylactic symptoms.

P. H. P.

Toxicological and Forensic.

Determination of Small Amounts of Lead in Animal Tissues. R. Nakaseko and I. Nakano. (*Kyoto Medical J.*, Aug., 1925.)—Three methods were used successfully for the complete destruction of the organic matter:—(1) Boiling with strong nitric acid and evaporation to dryness in porcelain, the carbonaceous residue being alternately moistened with strong nitric acid and ignited, till white. The ash is dissolved in dilute nitric acid, which is neutralised with ammonia; after adjustment to 0·1 *N* acidity the solution is saturated with hydrogen sulphide, and the precipitate centrifuged after 12 hours' standing. (2) Boiling with strong nitric acid, followed by strong sulphuric acid and 0·7 grm. of mercuric oxide in a Kjeldahl flask; evaporation of the acid in porcelain, and treatment of the residue as under (1). (3) The dried pulverised tissue is incinerated in an electric furnace and the ash treated as before. The lead sulphide is dissolved in nitric acid, the latter neutralised with ammonia, and a few drops of nitric acid added, followed by a drop of potassium chromate solution. The precipitate is washed with water in a centrifuge and dissolved in 1 c.c. of hydrochloric acid, 1 c.c. of 5 per cent. potassium iodide, and 1 c.c. of starch solution. After 5 minutes the liberated iodine is titrated with 0·001 *N* thiosulphate. The lowest limit of precipitability of lead sulphide was found to be 0·013 mgrm. Pb. per c.c., the presence of phosphates being prejudicial. With potassium chromate it is possible to detect 0·005 mgrm. Pb. per c.c.; chromic salts and excess of ammonium salts reduce the sensitiveness.—The electrolytic deposition of minute quantities of lead was thoroughly studied. A platinum dish (capacity 60 c.c.) forms the cathode; the anode is a flat spiral of platinum wire, 0·5 mm. in diameter. The solution (2·1 *N* nitric acid) is electrolysed for 5 to 10 hours at 0·5 V. and 0·05 A. The anodic deposit is dissolved in a mixture of 5 c.c. of 5 per cent. potassium iodide solution and 1 c.c. of glacial acetic acid; the iodine is titrated as above. Phosphoric acid, magnesium salts, and ammonium chloride interfere seriously (*cf.* ANALYST, 1925, **50**, 574).

W. R. S.

Toxic Action of Sassafras Oil and Safrol on Animals. G. A. Mallinson. (*Pharm. J.*, 1925, **115**, 576.)—Several instances of cats and dogs being poisoned through the use of insecticide ointments containing sassafras oil or synthetic safrol are recorded. Both the natural and synthetic products are likely to produce

paralysis and death within 2 days in cats; dogs are affected in a similar way, but to a less extent. It is even questionable whether preparations containing safrol can be always safely applied to children.

Dermatitis due to the External Use of Methylated Spirit. P. B. Mumford (*Brit. Med. J.*, 1925, 607–608.)—During the last twelve months an outbreak of severe dermatitis occurred among the surgeons at the Manchester Royal Infirmary, and more recently a closely comparable eczema has been produced among the employees of a firm of barbers in the same town. The dermatitis among the hospital staff was traced by elimination of all other factors—the soaps. the disinfectants, and the process of laundering—to the methylated spirit used for the purpose of disinfection. In the outbreak among the barbers, which was more severe, ten men suffered within a few months from itching, burning and tingling of the hands after using certain toilet preparations containing methylated spirit. Analyses were made of all possible irritants, with the following results:—The "dry shampoo" contained approximately 50 per cent. of water and 48 per cent. of methyl alcohol. There was a heavy deposit of a gritty solid which was found to consist almost entirely of potassium carbonate; small quantities of scent and colouring matter were also present, but there was no pyridine. Experimental inoculation of the crystals into the hand of a non-sensitised person did not produce any abnormal irritation. Analysis of the various "frictions," however, showed that one of them contained 0·49 per cent. of pyridine in the original preparation, and 25 per cent. of pyridine in the residue after evaporation on the water bath. There were also traces of arsenic and colouring matter. The residue from this "friction" caused irritation when rubbed into the skin. It is probable that the use of pyridine as a denaturant of the alcohol was responsible for the dermatitis in these cases. It has previously been pointed out by Prosser White (*Occupational Affections of the Skin*) that pyridine and methyl alcohol used in polishing trades may give rise to chronic dermatitis of the hands.

Agricultural Analysis.

New Method of Evaluating Basic Slags and Mineral Phosphates. E. Vanstone. (*J. Agric. Sci.*, 1925, **15**, 491–496.)—As is well known, the citric-solubility of mineral phosphates decreases when more of the material is used for the test; this appears to be due to a reverse reaction between the calcium citrate which is formed and the soluble phosphate. This is eliminated when oxalic acid is used. For each phosphate there is a definite constant rate of solubility in dilute weak acid, and this is directly proportional to the amount of phosphate present. Two per cent. oxalic acid solution is, therefore, recommended as a substitute for the citric acid; the rate of solution therein also indicates the rate at which the phosphate is taken up by the plant. The test can only be used, however, to compare basic slags with one another, or mineral phosphates among themselves.

H. E. C.

Rapid Method for the Determination of Phosphates. R. F. Le Guyon and R. M. May. (*Bull. Soc. Chim.*, 1925, **37**, 1291–1293.)—The phosphates are precipitated by an excess of 0·1 *N* silver nitrate solution in the presence of a slight excess of a saturated solution of sodium acetate. The precipitate is dried on a Bertrand sugar filter, washed with distilled water, and dissolved off the filter with concentrated nitric acid, and the amount of silver nitrate which brought about the precipitation is determined in this solution by Volhard's method, with the use of a solution of 0·1 *N* ammonium thiocyanate. D. G. H.

Colloidal Complications in the Thiocyanate Method of Determining Soil Acidity. F. O. Anderegg and R. P. Lutz. (*Ind. Eng. Chem.*, 1925, **17**, 1153–1154.)—In the thiocyanate method saturated potassium thiocyanate solution (in 95 per cent. alcohol) is added to the sample of air-dried soil; a red coloration is produced if the soil is acid and ferric iron is present. Alcoholic alkali solution is then added until the coloration is just discharged permanently. The ease of hydrolysis of ferric thiocyanate, even in alcoholic solution, introduces complications; the ferric hydroxide formed by the hydrolysis is often adsorbed by the colloidal clay usually present in a soil, resulting in a shifting of the hydrolysis equilibrium and consequently of the end-point. The time factor is of importance and, if much colloidal substance is present, the results of the titration are affected seriously. The blue or green coloration which develops when manganiferous soils are tested by this method is probably due to colloidal manganese dioxide, and the decolorisation of ferric thiocyanate, which occurs in soils of high manganese content, is apparently produced by the mutual adsorption of oppositely charged colloids. W. P. S.

Water Analysis.

Interference of Iodate in the Nitrite Test. C. F. Hickethier and A. Jacobucci. (*Zeitsch. anal. Chem.*, 1925, **67**, 129–134.)—In the analysis of samples of ground water from Santa Fé Province (Argentine Republic), positive reactions were obtained with Trommsdorff's reagent for nitrites (zinc iodide and starch), whilst the other nitrite tests gave negative results; this was traced to the presence of iodate. The water is obtained from tertiary strata of marine origin; it contains sodium bicarbonate as principal constituent, and more magnesia than lime. For the determination of the iodate the evaporation residue was dissolved in water, and the filtered solution was treated with 2 c.c. of 0·1 *N* potassium iodide solution and sulphuric acid. The liberated iodine was then extracted with carbon disulphide and determined colorimetrically. W. R. S.

Organic Analysis.

Squalene and Spinacene. E. André and H. Canal. (*Compt. Rend.*, 1925. **181**, 612–614.)—As a result of the investigation of the hydrocarbons in the liver oil from *Scymnus lichia* and from *Cetorhinus maximus* it is concluded that the unsaturated hydrocarbon spinacene isolated from the former by Chapman

(ANALYST, 1917, **42**, 161), and the squalene from the latter species by Tsujimoto, (ANALYST, 1916, **41**, 385); are not definite chemical entities, but mixtures of two or more hydrocarbons. By a series of fractional crystallisations from acetone the authors extracted from the hydrochlorides of the hydrocarbons in *Scymnus* oil two substances having m.pts. 107–108° C. and 143–145° C., respectively, and empirical formulae $C_{30}H_{50},6HCl$ and $C_{31}H_{52},6HCl$. From *Cetorhinus* oil were similarly separated products having m.pts. 107–108° C. and 144–145° C., and of formulae $C_{28}H_{46},6HCl$ and $C_{30}H_{50},6HCl$. It has also been found that the two hydrochlorides of spinacene and squalene which melt at 107–108° C. can be mixed without a depression of the m.pt. resulting, notwithstanding the fact that their chemical composition is different. The components melting at 143–145° C., however, when mixed, show a reduction to 139–140° C. H. E. C.

Fatty Acids of Shark Liver Oil. M. Tsujimoto. (*J. Soc. Chem. Ind. Japan*, 1925, **28**, 8.)—On investigating three samples of "Aizame Liver Oil" the following new acids were isolated: (*a*) $C_{24}H_{48}O_2$, for which the name of "selachoceric acid" is proposed; the white crystals have a melting point of 78° C. (*b*) $C_{24}H_{46}O_2$, a higher homologue of oleic acid; this acid (white crystals melting at 43° C.) is called "selacholeic acid." On hydrogenation a saturated acid, differing from selachoceric acid, and of m.pt. 82·0° C. is formed, and by the action of nitrous acid selacholeic acid is changed into the stereoisomeric "selachelaidic acid" of m.pt. 60·5° C. D. G. H.

Test to Show the Absence of Citrate or Tartrate in Mixtures. J. B. Peterson. (*Ind. Eng. Chem.*, 1925, **17**, 1146.)—The test depends on the interfering action of citrates and tartrates on the violet coloration of ferric salicylate. One c.c. of alcohol, 25 c.c. of water, 1 c.c. of 0·011 per cent. sodium salicylate solution and 1 c.c. of ferric chloride solution are placed in each of two test tubes, and the solution to be tested is added to one of the tubes, and the contents of both are diluted to the same volume. As little as 0·6 mgrm. of caffeine citrate or 0·3 mgrm. of potassium hydrogen tartrate alters the violet coloration (the other tube serves for comparison), whilst with larger amounts the violet colour is changed to yellow. The ferric chloride solution is prepared by diluting 1 c.c. of 10 per cent. ferric chloride solution to 50 c.c., adding ammonia drop by drop until the precipitate which forms dissolves only after vigorous shaking, then adding 1 drop of glacial acetic acid, and diluting the whole to 100 c.c. W. P. S.

Borneol in Spruce Turpentine. A. S. Wheeler and C. R. Harris. (*J. Amer, Chem. Soc.*, 1925, **47**, 2836–2838.)—Spruce turpentine, obtained as a by-product from the sulphite liquor from paper mills in Pennsylvania, contains borneol to the extent of about 2 per cent. Of this about 36 per cent. is *l*-borneol, but there is no iso-borneol. Borneol separated from the spruce turpentine in Northern Europe contains 14 to 22 per cent. of *l*-borneol. The method of separation was by fractionating the turpentine, after distilling off the *p*-cymene, and collecting the portion distilling between 70° and 80° C. at 3 mm. pressure. This fraction is cooled to −10° C., and the crystals of borneol are separated and recrystallised. H. E. C.

Identification of " Norit " and other Wood Charcoals. H. G. Tanner. (*Ind. Eng. Chem.*, 1925, **17**, 1191–1193.)—When a chip of wood is placed on a steel spatula and held in a Bunsen flame until charred completely, then cooled quickly by crushing on an iron plate and the particles examined under the microscope, certain particles will be found showing numerous perforations. For each species of wood, and probably for each wood, the size of the perforations and their proximity to each other are characteristic. In the case of birch charcoal the perforations are minute and very close together; in poplar charcoal they are large and close, in white pine charcoal they are large and widely separated, and so on. " Norit " appears to be birch charcoal, made by charring the wood sawdust in a limited supply of air, followed by acid extraction, washing and drying. W. P. S.

Distribution of Lignin in Woods. G. J. Ritter. (*Ind. Eng. Chem.*, 1925, **17**, 1194–1197.)—By treating wood with 72 per cent. sulphuric acid, diluting and boiling the mixture, and washing the residue, it is shown that about 75 per cent. of the lignin of the wood is present in the middle lamella, and 25 per cent. in the other layers of the cell wall; the distribution of the lignin can also be seen if the course of chemical treatment is followed by microscopical examination. The lignin of the middle lamella shows structural form, the cell wall lignin an amorphous character; the former is light brown in colour, whilst the latter is black. In the case of red alder the middle lamella lignin has a methoxyl content of 13·6 per cent., and the cell wall lignin 4·8 per cent. The middle lamella is the isotropic peripheral layer of the cell wall, including the irregular masses of isotropic material formed when three or more cells adjoin. W. P. S.

Inorganic Analysis.

Solid Hydrogen Peroxide. J. R. Booer. (*Chem. and Ind.*, 1925, **44**, 1137.)—A very pure and concentrated form of hydrogen peroxide is obtained by preparing the urea and hydrogen peroxide compound $CO(NH_2)_2.H_2O_2$. This substance, which has recently been placed on the English market under the name of *hyperol*, contains 35 per cent. of hydrogen peroxide and is free from all inorganic impurities. It is stable in temperate and sub-tropical climates. It begins to decompose when heated to 60° C., with formation of oxygen, water and urea. It is not inflammable. One grm. dissolved in 10 c.c. of water produces a solution of 10 volumes strength. It has the same variety of application as hydrogen peroxide, *e.g.* oxidation of sulphides and sulphites, production of a violet coloration with gold salts, determination of insoluble matter in red lead, the distinguishing of boiled and fresh milk, separation of iron and titanium and of iron and zinc from uranium; also oxidation of organic matter. R. F. I.

Vanadium Oxytrichloride as a Solvent. F. E. Brown and J. E. Snyder. (*J. Amer. Chem. Soc.*, 1925, **47**, 2671–2675.)—Vanadium oxytrichloride, a light yellow substance which is liquid between −150° and +127·19° C. is a useful solvent for a variety of substances. Bromine, iodine, red and white phosphorus,

and sulphur are readily dissolved, the last to the extent of 6 per cent. at 20° C. and 30 per cent. at 65° C. The ordinary metals are unaffected by it. Most inorganic salts are insoluble in it, whilst most organic liquids are miscible in all proportions. Aldehydes, phosphorus chlorides, and acetone react with it, as also does sulphur at temperatures above 80° C. H. E. C.

Hydrazine Sulphate in Iodimetry. E. Cattelain. (*J. Pharm. Chim.*, 1925, **117**, 387–391.)—Hydrazine sulphate presents advantages over sodium thiosulphate and arsenious anhydride for determining iodine in that it is readily obtained pure, the solid and solutions are stable, and the oxidation to hydriodic acid is absolutely quantitative. D. G. H.

Occurrence of Iodine in Water-gas. H. Mohorčič. (*Chem. Zeit.*, 1925, **49**, 925.)—The appearance of iodine vapour when hydrochloric acid came into contact with brass or copper gauze heated in a gas flame was attributed to the use of brown coal in the manufacture of the water-gas present in the particular gas employed. T. H. P.

Interaction of Ammonia and Mercurous Salts. F. Feigl and A Sucharipa. (*Zeitsch. anal. Chem.*, 1925, **67**, 134–140.)—The reaction is generally expressed in the textbooks by the equation $Hg_2Cl_2+2NH_3=NH_4Cl+Hg+HgClNH_2$. An intimate mixture of precipitated metallic mercury and " infusible precipitate " ($HgClNH_2$), however, is grey, not black, like the product of the reaction under consideration. The authors prove experimentally that the primary reaction product is amido-mercurous chloride: $Hg_2Cl_2+2NH_3=NH_4Cl+Hg_2Cl\,NH_2$. This, like mercurous compounds generally, undergoes decomposition to $HgClNH_2+Hg$, a reaction that starts gradually at ordinary temperature and requires several months for approximate completion. At 100° C. the decomposition is more rapid, but reaches a state of equilibrium at about 25 per cent. completion, owing to the reversible reaction $HgClNH_2+Hg \rightleftarrows Hg_2ClNH_2$. W. R. S.

Separation of Mercury from Iron. G. Spacu. (*Zeitsch. anal. Chem.*, 1925, **67**, 147–150.)—The solution (100 to 150 c.c.) is treated with solid ammonium thiocyanate (*e.g* one grm. for 0·2 Hg and 0·1 Fe); the familiar red colour is obtained. Pyridine is added, drop by drop, until the colour changes to yellowish-brown. After addition of another 3 to 4 drops of pyridine, the solution is heated almost to boiling, left to settle, and filtered. The precipitate is washed 3 to 4 times by decantation, collected, washed with hot water, ignited, and weighed as Fe_2O_3. The filtrate containing the mercury is acidified with hydrochloric acid, and the mercury precipitated and determined as sulphide (*cf.* ANALYST, 1925, **50**, 580). W. R. S.

Sensitive Reaction for the Detection and Determination of Bismuth. A. Geirard and E. Fourneau. (*Compt. Rend.*, 1925, **181**, 610–611.)—Advantage is taken of the formation with tetra-acetylammonium hydroxide of a strongly coloured iodobismuthate $(C_{16}H_{33})_4NOBiI_3$, which is soluble in benzene. A benzene

solution of this base is shaken with the bismuth solution, then potassium iodide is added. The benzene layer becomes dark red, the intensity of colour being proportional to the quantity of bismuth. To make the reaction still more sensitive, the benzene solution can be concentrated and examined in a microscopic cell. Iron must be removed or rendered inert by the addition of a solution containing 200 grms. of sodium formate, 30 grms. potassium iodide, 5 grms. sodium sulphite, and 5 c.c. of formic acid per litre. This reagent makes the test available in the presence of quite large quantities of iron. H. E. C.

The Alleged Determination of Nickel as Dioxide. L. Moser and W. Maxymowicz. (*Zeitsch. anal. Chem.*, 1925, **67**, 140–142.)—The method of Vaubel (ANALYST, 1923, **48**, 41) was submitted to a critical examination. It was found quite impossible to obtain a dioxide, NiO_2, by evaporation of a solution of nickel nitrate and heating of the residue in an air-bath to about 300° C.; the oxide thus obtained was tested by iodimetry, and found to consist chiefly of monoxide. The method should be expunged from the literature. W. R. S.

Determination of Uranium. G. E. F. Lundell and H. B. Knowles. (*J. Amer. Chem. Soc.*, 1925, **47**, 2637–2644.)—The difficulty in the volumetric determination of uranium is to make certain that the reduction with zinc is always carried to the same point before the permanganate titration. This may be overcome by the use of the Jones reductor followed by the exposure of the solution to air. The solution, which must be free from reducing substances other than uranium, should contain about 1 per cent. of this metal together with 5 per cent. of sulphuric acid; after addition of enough permanganate to produce a permanent pink coloration the solution is cooled to 20° C. and passed through the reductor at the rate of about 50 to 100 c.c. per minute, then air is drawn through the liquid for 5 minutes and, after standing for a like period, it is titrated with 0·1 *N* potassium permanganate solution, 1 c.c. of which = 0·01191 grm. of uranium. For the gravimetric determination a dilute sulphuric acid solution of the uranium is prepared; it must be free from carbon dioxide, organic compounds or substances (other than uranium) which are precipitated by ammonia. To it are added a few drops of methyl-red solution and, after boiling, just enough ammonia to produce a yellow colour. A macerated half-sheet of filter paper is stirred in, the liquid then filtered, and the precipitate washed with hot 2 per cent. ammonium nitrate solution, dried, ignited in air in a platinum crucible to constant weight, and weighed as U_3O_8. H. E. C.

Detection of Sodium in Presence of Potassium. J. Meyerfeld. (*Zeitsch. anal. Chem.*, 1925, **67**, 150–151.)—The procedure is based on the differential solubility of the oxalates (100 parts of water dissolve 40 parts of the potassium, and 3 of the sodium, salt). The salt (preferably chloride) mixture, containing not much less than 10 per cent. of sodium chloride, and free from other metallic chlorides, is finely powdered, and a pinch shaken in a small dry test tube with a few drops of saturated ammonium oxalate solution; part of the salt should

remain undissolved. After some time (depending upon the proportion of the sodium salt present) the liquid will become cloudy or milky, due to the precipitation of finely-crystalline sodium oxalate. A solution of potassium oxalate may be used instead of the ammonium salt. W. R. S.

Physical Methods, Apparatus, etc.

Detection of Artificial Pearls. P. Szilard. (*Comptes Rend.*, 1925, **181**, 413–414.)—The optical method previously described (ANALYST, 1925, **50**, 202), although generally reliable, sometimes fails because the striations on the artificial pearls are not visible. Another method which has been found useful in such cases depends upon the fact that artificial pearls contain a relatively greater quantity of mother of pearl, which has a greater density than the pearl substance. It is, therefore, possible to differentiate by flotation. Various liquids have been tried, and the following process has been found to give reliable results without spoiling the surface of the gems. Several small specimens known to be cultivated and a like number of Oriental pearls of similar size to the one to be examined are floated in 10 c.c. of methylene iodide (sp. gr. 3·34), and then monobrom-naphthalene is added, drop by drop with shaking, until the two kinds clearly separate. The Oriental pearls will float and the cultivated ones sink. This enables one to obtain a liquid of the proper density, to which the unknown pearl is added. Its origin is indicated according to whether it floats or sinks. H. E. C.

Distinction between Natural and Artificial Pearls. C. Chilowsky and F. Perrin. (*Compt. Rend.*, 1925, **181**, 604–605.)—In natural pearls the layers are spherical and concentric, and, if the interior is illuminated at any point, the whole pearl is uniformly illuminated, but in an artificial one this feature is absent. For their examination a device called an endoscope is of particular value; it consists of a tiny tube bearing at each end a mirror inclined at 45°. This is

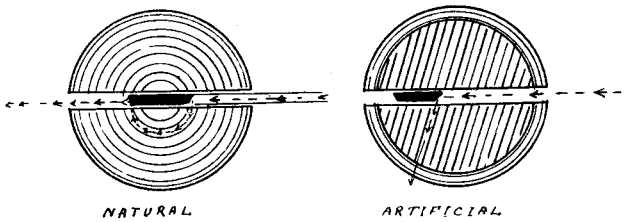

inserted into the central opening of the pearl; on directing a strong pencil of light down the opening and moving the endoscope along, there is, in the genuine pearl, a position in the centre at which the light transmitted axially is at a maximum (see fig.), and the pearl is uniformly illuminated, showing no striations. Observation is, of course, made microscopically. In the case of artificial pearls there is no such maximum seen on axial observation, and the striations are clearly visible when the pearl is observed obliquely. (See also preceding abstract.) H. E. C.

Fluorescence of Fisetin. L. Meunier and A. Bonnet. (*Le Cuir*, 1925, 251.)—An intense yellow fluorescence is observed when a freshly-cut surface of quebracho wood or tizerah is exposed to the light of a Wood lamp. This phenomenon is not shown by oak bark, mimosa bark, mangrove bark, chestnut wood, sumac, gall-nuts, etc. Aqueous solutions of quebracho and of tizerah only show a slight fluorescence, but if various materials, such as filter-paper, wool, cotton, etc., are immersed in such solutions and immediately exposed to the lamp, the vivid fluorescence appears. The test is very sensitive, giving positive results with solutions of 1 : 10000. It can be used as a means of detecting quebracho (sulphited or non-sulphited) or tizerah in mixed tan liquors and also in testing a leather for the presence of these materials. This is best done by shaking freshly-cut shavings of the leather with a little water, immersing some filter-paper in the extract, and testing as above. The fluorescence is caused by fisetin, and the authors confirm the work of Perkin and Gunnell (*J. Chem. Soc.*, 1896, 313), who identified the yellow colouring matter in quebracho colorado with the fisetin in fustic.

R. F. I.

Simple Portable Photometer for Gauging Intensity of Ultra-Violet Rays. F. W. Alexander. (*Special Report by the Medical Officer of Health to the Metropolitan Borough of Poplar*, Oct., 1925.)—This apparatus, termed "U–V–Scope," indicates by the degree of fluorescence the intensity of the ultra-violet rays in the radiation emitted from quartz mercurial vapour lamps. The principle adopted is that of an "extinction photometer," ultra-violet rays being allowed to enter a box, in the form of a camera (7 in. × 4 in. × 3 in.) through a Chance filter, and the extinction point being controlled by means of an iris diaphragm manipulated by a metal arrow pointing to an arbitrary scale for recording purposes. A reflector of silver-plated copper is fixed at an angle of 45° in front of the iris. A thin black wire (or black silk thread) is stretched across on the eye-piece side of the circumference of the iris diaphragm, this being useful for focussing, although for extinguishing purposes it is not yet perfect. The iris diaphragm is fixed close to the Chance filter, which must be of sufficient thickness to exclude all visible light ($\frac{1}{4}$ in. is sufficient), and it must be polished on both sides to prevent dispersion of rays and, as far as possible, to allow the ultra-violet rays to pass directly through it. The fluorescent screen is of uranium glass, and can be removed and replaced by a frame made to take a piece of "Seltona" paper, so that a photographic shade of the ultra-violet rays, without and with reflector, can be recorded. By means of this apparatus the author has found that ultra-violet rays were still being emitted from a quarz mercury vapour atmospheric lamp which had been in use for 5 years, without attention, outside a building. Certain textile fabrics were also tested, and, according to the brilliancy obtained, were found to transmit the near ultra-violet rays in the following order:—(1) Expensive make of artificial silk; (2) Jap silk and silk stockings; (3) Nainsook and very cheap cotton stockings; (4) fine linen, not so good as No. 3; (5) Long cloth and calico allowed some ultra-violet rays to pass; (6) unbleached calico, just perceptible.

Reviews.

ORGANIC SYNTHESES. Vol. IV. OLIVER KAMM, Editor-in-chief. Pp. 89. New York: John Wiley & Sons; London: Chapman & Hall, Ltd. 1925. Price 7s. 6d. net.

The fourth number of this series is practically identical in general character with its predecessors, which were reviewed in Vols. 47, 48 and 49 of THE ANALYST.

Some of the preparations are on rather a smaller scale than heretofore, as the editors are considering the needs of research students as well as those of the manufacturers of research chemicals. References to this series of publications are gradually making their appearance in English text books, showing that the work of these American investigators is proving of value to teachers on this side of the Atlantic. Twenty-eight syntheses, the work of fifteen contributors besides the editorial board, are given in the present number; of these the following are likely to be of more general interest—cupferron, glycine, β-methylanthraquinone, tolunitrile and triphenylmethane.

The cumulative index, begun in Vol. 3, is continued in this volume.

A. F. KITCHING.

A STUDENT'S MANUAL OF ORGANIC CHEMICAL ANALYSIS QUALITATIVE AND QUANTITATIVE. By J. F. THORPE, F.I.C., F.R.S., and M. A. WHITELEY, D.Sc., F.I.C. Pp. x.+250. London: Longmans, Green & Co. Price 9s. net.

A book emanating from the Imperial College of Science and Technology and bearing the names of Thorpe and Whiteley is expected to be more than ordinarily useful. The reviewer is not disappointed, and, on enquiry, finds that already it is recommended in several colleges of repute.

As is usual in books of this type, the question of the detection of the elements is the first point discussed. The subject is treated very fully indeed, and its importance stressed by allusion to the classical error perpetrated in the case of taurin (aminoethyl sulphonic acid) by Dumas and Pelouse and remedied eight years later by Retdenbacher. This introduction of historical fact is a feature of the book which gives it additional interest, and it should prove stimulating to the student to learn something of the difficulties under which the pioneers of chemistry laboured.

The qualitative section of the book deals with the reactions of the commoner organic compounds. These are set out very clearly and in a readily accessible form.

The quantitative section is very comprehensive and should help to restore this very highly important, but often neglected, branch of organic chemistry to its rightful place in the training of chemists. A large number of standard methods have been collected together, and often several alternative procedures are given. References to original papers are plentiful, and the book closes with a description of some methods of micro analysis. Two excellent indexes (subject and author) are also included.

Although the authors have not attempted to draw up any scheme of "group" analysis for organic compounds, a very comprehensive, readable and up-to-date volume has been produced, and we can only wonder how so much really useful knowledge can be compressed into so small a space and be sold for so modest a sum as nine shillings. Students and research workers will do well to procure this book, but it must not be thought infallible, for, as the authors say, it is written for those who have developed chemical common sense, and to such it will be eminently useful.

HAROLD TOMS.

PRACTICAL PHARMACOGNOSY. By T. E. WALLIS, B.Sc., F.I.C., with a Foreword by H. G. GREENISH, D.ès.Sc., F.I.C. Pp. x.+115, with 81 illustrations. 8¾ inches by 5½ inches. London: J. & A. Churchill. 1925. 7s. 6d. net.

This volume is actually an introduction to the practical study of materia medica, and is intended to be supplementary to the theoretical study of the subject. It consists of the class work schedules used in the laboratories of the Pharmaceutical Society, together with notes explanatory of the schedules.

The work covers examples from the various morphological groups into which the materia medica is usually divided, and the author has selected such examples as lend themselves readily to microscopical and chemical examination. A student who works his way methodically and intelligently through these schedules ought to possess the ability to attack the examination of drugs which have not come within the scope of Mr. Wallis's handbook.

The feature of this work which impresses one most strongly is the number of excellent drawings with which Mr. Wallis and his wife have illustrated it. If he could see his way to provide an atlas of materia medica dealing with official drugs, he would confer a great benefit upon all who are interested in the subject, and it would certainly be greatly superior to any other that has hitherto appeared in this country.

The final portion of the book is occupied with botanical descriptions of about forty indigenous medicinal plants, and is accompanied by many drawings of the same high quality.

W. KIRKBY

HEXOSAMINES AND MUCOPROTEINS. By P. A. LEVENE. (Monographs on Biochemistry). Pp. x.+163. London: Longmans, Green & Co. 1925. Price 10s. 6d. net.

Dr. Levene is a writer who never loses sight of the wood in spite of the large amount of attention which he devotes to individual trees. His new book on "The Hexosamines and Mucoproteins" is admirably clear, both as to ground plan and detail. He states on p. 123 that "In no chapter of chemistry, or even in the special branch of tissue components, is there so much confusion as in that of glucoproteins or mucoproteins," yet out of this refractory mass of material he has constructed a monograph in which is recorded not only the history of the experimental study of the subject, but also that of the evolution of thought that accompanied it.

The book is divided into three sections. The first deals with the amino-sugars and gives an account of the methods by which they can be isolated and identified. The experimental evidence available for determining their molecular structure is very clearly recounted, and a most readable chapter is included on the calculation of the optical rotation due to the individual carbon atoms in the different hexoses. The second section deals with the position of the amino-hexoses in the conjugated sulphuric acids, chondroitin and mucoitin sulphuric acids, now known to be the associated "carbohydrate" in the complex group characteristic of the mucoproteins. Finally there is an account, as far as evidence is available, of the mucoproteins themselves, their classification, distribution in the organism, and possible biological function. The book concludes with an account of the old theory of a possible glucoside structure in proteins like ovalbumin, serum albumin, etc. It is very lucidly shown how the theory originally came into being, and the evidence for and against it is summarised.

The arrangement of the book is in general good. The biological significance of the results of chemical analysis is kept well in the foreground. Where the theories of other workers conflict with those of the author they are given a fair statement, though the author never sits on the fence. The arrangement of the analytical methods in separate sections is good.

The bibliography is not altogether satisfactory. For instance, in Chapter VII. on the Walden inversion, a number of important papers are mentioned in the text, and yet the references to them are missing from the bibliography. In Chapter II., again, the subject matter is called "hexosamines" in the chapter and "aminohexoses" in the bibliography, and here, again (p. 14), important papers mentioned in the text are omitted from the bibliography to the chapter, though given elsewhere in another connection.

There is one point of vagueness in the book. In Table II., "Molecular Rotation Difference," the value 16,600 is assigned to *d*-galactose, 16,800 to *d*-xylose. On p. 7 the value for the molecular rotation of galactose is given as

8,300, for xylose 8,400. The connecting link between these two statements has not anywhere been made clear. The sentence on p. 141, referring to "unique instances," must surely have been retained only by accident.

DOROTHY JORDAN LLOYD.

PRINCIPLES AND PRACTICE OF INDUSTRIAL DISTILLATION. By E. HAUSBRAND. Translated from the fourth, new and enlarged, German edition, by E. H. TRIPP, Ph.D. Pp. xx.+300, with 21 figures, 68 tables, and 16 charts. London: Chapman & Hall, Ltd. 1925. Price 21s. net.

This book, by the author of the well-known treatise on evaporating, condensing, and cooling apparatus, will assume a well-deserved place in the literature of distillation, and all who have to do with distillation on the industrial scale will find therein a vast amount of information of interest and much of practical value.

The English title is, perhaps, somewhat more comprehensive than is justified. As the translator points out, it is not easy to furnish the exact English equivalent for the German title, "Die Wirkungsweise der Rektifizier- und Destillier-Apparate," but "The mode of action of rectifying and distilling apparatus" seems better fitted to indicate the contents of the book than the English title actually chosen. The principles of distilling and rectifying processes are certainly considered, but none of the well-known types of rectifying column is described or even mentioned. An indication is given in the Introduction that it was the intention of the author, whose death occurred recently, to draw on his long experience in the design and manufacture of industrial distilling plant in order to discuss details relating to constructional materials, pressure, temperature, mixing proportions, fuels, etc. As the complement of the present work, such a publication would undoubtedly have been of great value.

The book is divided into four parts. The first gives a general explanation of the changes occurring in a rectifying column during the distillation of a liquid mixture, indicates the derivation of the mathematical expressions for the amounts of heat concerned in the operations, and demonstrates the mode of applying these expressions to calculate the required dimensions of the apparatus. In the second part, the theoretical considerations are utilised to calculate the dimensions of apparatus and other data involved in the separation of the components of a number of such diverse mixtures as alcohol-water, ammonia-water, nitrogen-oxygen, etc. Part III. comprises the tables, and Part IV. the charts, embodying the numerical results necessary for the treatment of these systems.

Apparatus for resolving into their constituents liquid mixtures containing more than two components is scarcely touched on, for three reasons: firstly, the case most commonly encountered is that of the binary mixture; secondly, the theoretical foundations underlying the resolution of more complex mixtures are largely unknown; thirdly, such resolution frequently amounts in practice to the separation of two substances.

A feature of the book which will widen the circle of readers is the very simple character of the mathematical methods utilised by the author. The printing is excellent, and the numerous diagrams are well reproduced in nearly all cases, although two or three suffer from some lack of clearness. The translation, almost throughout, furnishes a model of the way in which such work should be carried out, although a few sentences, the last complete one on page 27 among them, do not read quite smoothly; the only evident slip in proof-correction is the misplacement of the entry "Crommelin" in the index. Without imputing blame in any particular direction, regret may be expressed that the price of the book, like that of many another scientific work produced nowadays, has to be so high.

T. H. POPE.

THE TECHNOLOGY OF WOOD DISTILLATION. By M. KLAR. Translated by ALEXANDER RULE, M.B.E., D.Sc., Ph.D., F.I.C. Pp. 496; illustrations 49. (A translation of "Technologie der Holzverkohlung" by M. Klar.) London: Chapman & Hall. 1925. Price 25s. net.

The translator expresses the modest hope that the work "will fill a gap in the literature on the subject available to English readers." The original volume is so well known that a good translation, such as this is, is certain to be welcomed. The raw materials are well described and a very useful chapter occurs later on in the book, giving practical details for the preparation of the wood before distillation. Charcoal, pyroligneous acid and tar all receive due consideration and the value of the gas is not forgotten. Some useful calorific statistics are added. The different types of retorts are well described and conveniently classified. The difficult subject of sawdust is reasonably considered, although the limitations of the volume do not permit much reference to sawdust gas. The preparation of wood spirit, acetate of lime, acetic acid, acetone and tar are all described. The chapters on fractional distillation and analysis are clearly intended for those having little knowledge or experience in such matters, and from that point of view are successfully treated.

There is a generous supply of diagrams to illustrate the very important subject of the relative merits of the different types of retorts and distillation apparatus. Various condensing plants are shown and their respective merits discussed, although the corrosion of condenser plant might be more thoroughly considered. The paper used is good, strong and white, the type is clear and the binding substantial. The Index is excellent, though the contents table is rather brief. A list of illustrations would be useful.

In the final chapter or two the translator has allowed himself more freedom from the original, but the reader will wish that he had gone a little further than just hope to "fill a gap." A good Bibliography is much needed, especially one suited to English and American readers. The original references are given but are seldom easily accessible to English readers. There is a considerable

amount of literature, for example, in the *Journal of the Society of Chemical Industry*, and other English and American scientific publications, of later date than the compilation of the original volume, some of which might easily find a place in a final bibliography, even if the translator did not wish to interrupt the original text. As this excellent edition is sure of a rapid sale, it is hoped that future reprints will be called for, when the translator could add a suitable bibliography as an appendix, without appreciably increasing the cost.

S. HOARE COLLINS.

Publications Received.

THE CHEMICAL ANALYSIS OF FOODS. By H. E. COX. London: J. & A. Churchill. Price 18s. net.

PRACTICAL PHYSICAL AND COLLOID CHEMISTRY. By L. MICHAELIS. Translated by T. R. PARSONS. Cambridge: W. Heffer & Sons. Price 7s. 6d.

THE CHEMISTRY OF DRUGS. By NORMAN EVERS. London: ERNEST BENN LTD. Price 32s. 6d.

PHOTOSYNTHESIS. By W. STILES. London: LONGMANS & CO. 16s. net.

THE CHEMISTRY OF THE ANCIENT ASSYRIANS. By R. CAMPBELL THOMPSON. London: Luzac. Price 21s.

HANDBUCH DER BIOLOGISCHEN METHODEN. BAKTERIOLOGISCHEN UNTERSUCHUNG VON NAHRUNGSMITTELN. By W. GAEHTGENS. Berlin: Urban & Schwarzenburg. Price 21m.

SOME NEWLY DISCOVERED STANZAS BY MILTON. By H. C. H. CANDY. London: Nisbet & Co. Price 7s. 6d. net.

An account of the Milton-Ovid Script discovered in 1921, with the evidence that proves that the verses were written by Milton and are in his handwriting.